Whirlpool YLTE5243DQ6 05 - DRYER SUPPORT AND WASHER PARTS

DRYER SUPPORT AND WASHER PARTS

For Model: YLTE5243DQ6
(Designer White)

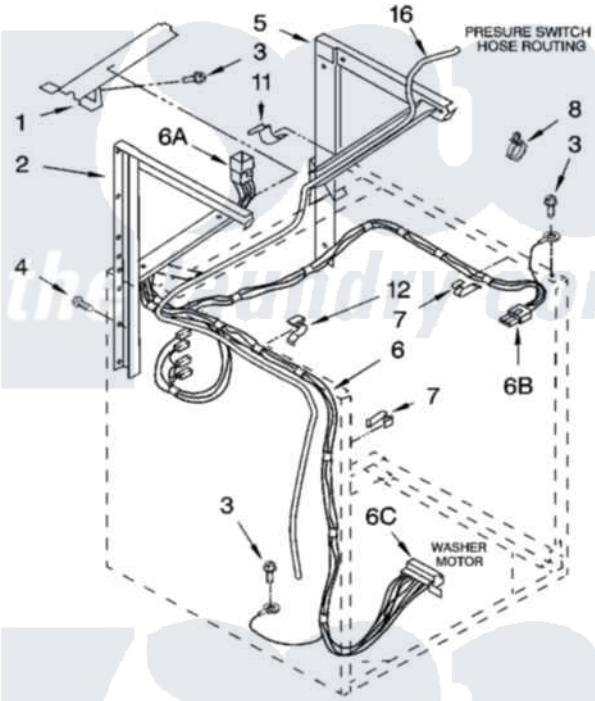

8181025 7

Whirlpool Residential Whirlpool YLTE5243DQ6 Washer/Dryer Parts Parts Diagram 05 - DRYER SUPPORT AND WASHER PARTS
Click on the part number to view part

Item	Original Part Number	Replaced By	Status	Part Description
1	694304			Cover, Channel
2	692647			Support, Dryer
3	343641	681414		Screw, 10AB X 1/2
4	3400000			Screw, 10-24 X 3/8
5	692646			Support, Dryer
6	3957867			Harness, Upper
"	696074		Not Available	Plug, Terminal (12-Way) (Connects With Automatic Console Harness)
"	62889			Receptacle, Terminal
"	62505			Block, Disconnect
7	3347812	8528351		Clip
8	3352501	8559320		Restraint, Hose
11	90016			Clip, Pressure Switch Hose
12	693141		Not Available	Clip, Wiring Harness (3)
16	8066080	353244		Hose, Pressure Switch