Whirlpool YWED94HEXR2 02 - CABINET PARTS

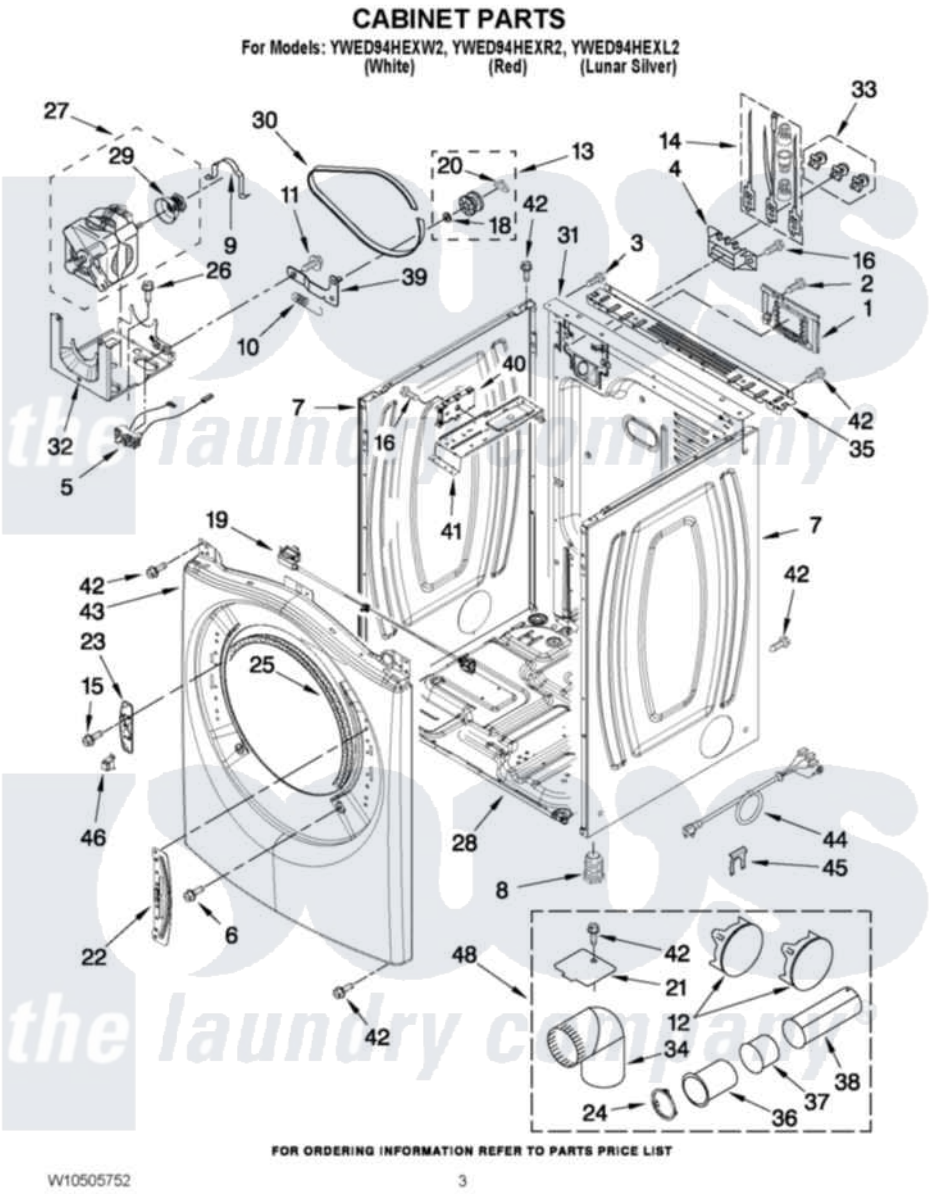

Whirlpool Residential Whirlpool YWED94HEXR2 Dryer Parts Parts Diagram 02 - CABINET PARTS
Click on the part number to view part

Item	Original Part Number	Replaced By	Status	Part Description
1	W10316167			Cover,
2	3390631			Screw, 10-16 X 3/8
3	8533974	4331106		Screw, No.10-32 X 7/16
4	3397659			Block, Terminal
5	W10411936			Switch, Broken Belt
6	3357011	308685		Side Trim)
7	W10468495			Panel, Side
"	W10468502			Panel, Side
"	W10468499			Panel, Side
8	3392100	49621		Feet-Leveling
NI	279810			Foot-Optional
9	W10121316			Plug, Multivent
10	3387374			Spring, Idler
11	3389420			Retainer-Idler 1/4-20 X 1/16
12	W10404617			Plug, Multivent
13	3388672	279640		Pulley-Idr

14	279318			Terminal Tinned And Brass Panel
15	W10288126			Screw, 10-32 X 1/2
16	90767			Screw, 8A X 3/8 HeX Washer Head Tapping
18	W10121334			Washer, Thrust
19	W10469644			Door Switch Assembly
20	690997			Washer, Thrust
21	W10354249			Plate, Cover
22	W10208218			Bracket, Door Hinge
23	W10208250			Strike, Door
24	W10344699			Collar, Duct
25	3387242			Seal, Front Panel
26	343641	681414		Screw, 10AB X 1/2
27	W10396028	279787		Motor-Drve
28	8565046			(BROKEN BELT BASE, CABINET SWITCH)
29	8578220			Pulley, Motor
30	3387610	661570		Belt
31	W10487430			Panel, Rear
32	W10242878			Bracket, Motor Mounting
33	279393			Terminal Block Screw Kit
34	W10416072		Not Available	4`` - 90° ELBOW
35	W10208382			Bracket, Rear Dryer
36	8563747			Exhaust Pipe Medium Pipe
37	W10331278			Exhaust Pipe
38	8563749			Exhaust Pipe
39	3388674	W10118756		Idler Bracket
40	W10410008			Control Board
41	W10259611			Bracket, Control
42	3390647	488729		Screw
43	W10208192			Front Panel
"	W10337783			Front Panel
"	W10316296			Front Panel
44	3394208			Cord, Power
45	694415			Clip, Strain Relief
46	W10208401			Spring Catch Assembly
NI	W10331132			Dryer Exhaust Kit

the laundry company®