Whirlpool YWED9600TB0 02 - CABINET PARTS

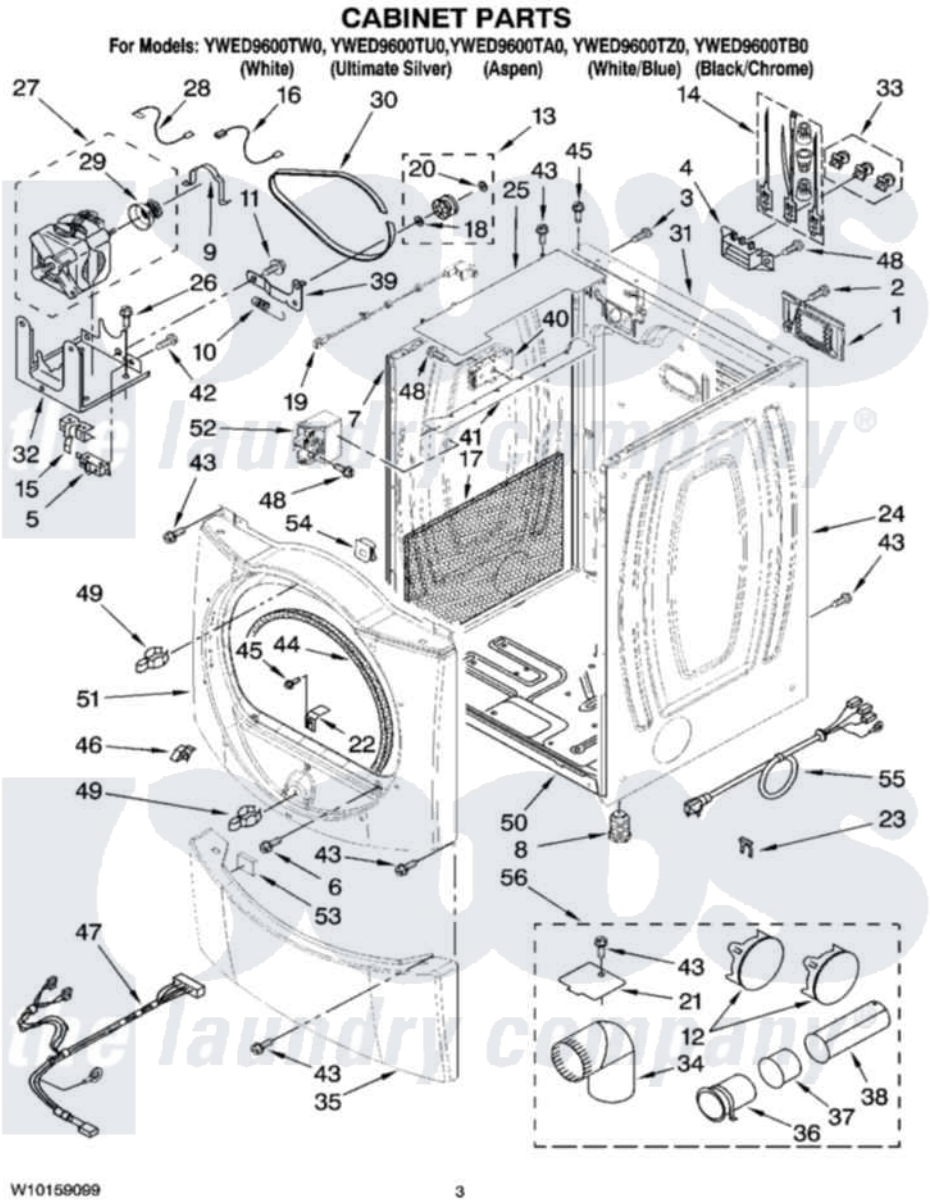

Whirlpool Residential Whirlpool YWED9600TB0 Dryer Parts Parts Diagram 02 - CABINET PARTS
Click on the part number to view part

Item	Original Part Number	Replaced By	Status	Part Description
1	8576583	W10119283		Cover, Terminal Block
2	3390814	90767		Screw, 8A X 3/8 HeX Washer Head Tapping
3	8533974	4331106		Screw, No.10-32 X 7/16
4	3397659			Block, Terminal
5	8066134	279782		Switch-Lid
6	3357011	308685		Side Trim)
7	W10138989	W10117272		Panel
"	W10138995	W10117286		Panel
"	W10138999	W10156768		Panel
"	W10138996	W10117282		Panel
8	3392100	49621		Feet-Leveling
"	279810			Foot-Optional
9	660658			Clamp, Motor Mounting 343481 685441
10	3387374			Spring, Idler
11	3389420			Retainer-Idler 1/4-20 X 1/16

12	697750	W10470674	Dryer Exhaust Kit
"	8579117		Plug, Multivent
"	W10136987		Plug, Multivent
"	3388309	W10470674	Dryer Exhaust Kit
13	3388672	279640	Pulley-Idr
14	279318		Terminal Tinned And Brass Panel
15	8066120		Lever, Door Switch
16	3394081		Wire, Broken Belt Switch
17	W10128772	8564134	Board, Sound Dampening
18	233520		Washer, Thrust
19	W10128087	W10318609	Switch, Assembly Door
20	W10121334		Washer, Thrust
21	8066115	3394331	Plate Cover
22	8529053		Ramp, Door Door Switch
23	694415		Clip, Strain Relief
24	W10139003	W10117273	Panel
"	W10139009	W10117287	Panel
"	W10139013	W10156774	Panel
"	W10139010	W10117283	Panel
25	W10118470		Cover, Bracket Control
26	343641	681414	Screw, 10AB X 1/2
27	8538263	279787	Motor-Drve
28	3398948		Wire, Jumper
29	8578220		Pulley, Motor
30	3387610	661570	Belt
31	W10053558	W10116475	Panel, Rear
32	3387118		Bracket, Motor
33	279393		Terminal Block Screw Kit
34	49026		4" - 90° Elbow
35	W10116271	W10246269	Panel, Toe
"	W10116277		Toe, Panel
"	W10140572		Toe Panel
"	W10116273		Toe Panel
36	8563747		Exhaust Pipe Medium Pipe
37	8563750		Exhaust Pipe
38	8563749		Exhaust Pipe
39	3388674	W10118756	Idler Bracket
40	W10141671		Board, Control
41	8563727		Bracket, Control
42	98129		Screw, 6-20 X 1 1/16
43	3390647	488729	Screw
44	3387242		Seal, Front Panel
45	3393008	308685	Side Trim)
46	8519459		Clip, Toe Panel
47	W10110990	W10181463	Harness, Digital Interface
48	90767		Screw, 8A X 3/8 HeX Washer Head Tapping
49	696144	279570	Latch
50	8519207		Base, Cabinet
51	8578388		Front Panel
"	8578940		Front Panel
"	W10140574		Front Panel

the laundry company®

"	8578936			Front Panel
52	3407228			Assembly, Power Cube
53	3389682			Space-Toe Panel User-Interface
54	62825			Clip-S Type Control Board
55	8579325			Power Cord
"	BLANK		Not Available	Optional Parts Not Included
56	279818	W10470674		Dryer Exhaust Kit
"	279820	W10470674		Dryer Exhaust Kit
"	280171	W10470674		Dryer Exhaust Kit
"	W10152954	W10470674		Dryer Exhaust Kit

the laundry company®
the laundry company®
the laundry company®