Tumble Dryers

120 Pound Capacity
170 Pound Capacity
200 Pound Capacity

Models Starting Serial No. 0907003062

Refer to Page 6 for Model Numbers

Troubleshooting

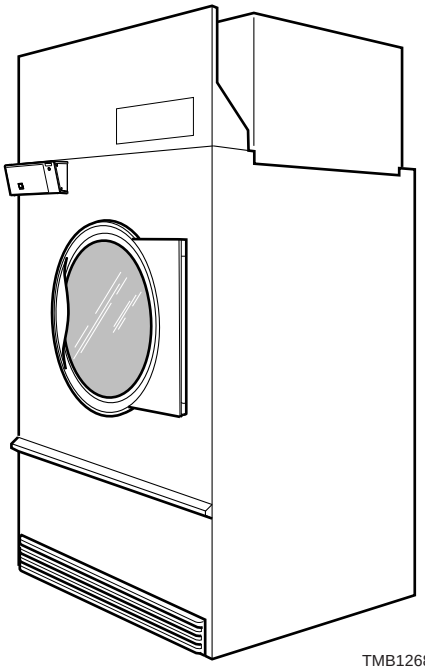

Alliance Laundry Systems

www.alliancelaundry.com

Part No. 70422201R1
April 2013

Table of Contents

Section 1
Safety Information

Throughout this manual and on machine decals, you will find precautionary statements (“CAUTION”, “WARNING”, and “DANGER”) followed by specific instructions. These precautions are intended for the personal safety of the operator, user, servicer, and those maintaining the machine.

DANGER

Danger indicates an imminently hazardous situation that, if not avoided, will cause severe personal injury or death.

WARNING

Warning indicates a hazardous situation that, if not avoided, could cause severe personal injury or death.

CAUTION

Caution indicates a hazardous situation that, if not avoided, may cause minor or moderate personal injury or property damage.

Additional precautionary statements (“IMPORTANT” and “NOTE”) are followed by specific instructions.

IMPORTANT: The word “IMPORTANT” is used to inform the reader of specific procedures where minor machine damage will occur if the procedure is not followed.

NOTE: The word “NOTE” is used to communicate installation, operation, maintenance or servicing information that is important but not hazard related.

In the interest of safety, some general precautions relating to the operation of this machine follow.

WARNING

- **Failure to install, maintain and/or operate this product according to the manufacturer’s instructions may result in conditions which can produce serious injury, death and/or property damage.**
- **Do not repair or replace any part of the product or attempt any servicing unless specifically recommended or published in this Service Manual and unless you understand and have the skills to carry out the servicing.**
- **Whenever ground wires are removed during servicing, these ground wires must be reconnected to ensure that the product is properly grounded and to reduce the risk of fire, electric shock, serious injury or death.**

W006R2

IMPORTANT INFORMATION: During the lifetime of a tumbler, it may require service. The information contained in this manual was written and is intended for use by qualified service technicians who are familiar with the safety procedures required in the repair of a tumbler, and who are equipped with the proper tools and testing equipment.

WARNING

To reduce the risk of electric shock, fire, explosion, serious injury or death:

- **Disconnect electric power to the tumble dryer before servicing.**
- **Never start the tumble dryer with any guards/panels removed.**
- **Whenever ground wires are removed during servicing, these ground wires must be reconnected to ensure that the tumble dryer is properly grounded.**

W240R1

WARNING

Repairs that are made to your products by unqualified persons can result in hazards due to improper assembly or adjustments subjecting you, or the inexperienced person making such repairs, to the risk of serious injury, electrical shock, or death.

W007

CAUTION

If you or an unqualified person perform service on your product, you must assume the responsibility for any personal injury or property damage which may result. The manufacturer will not be responsible for any injury or property damage arising from improper service and/or service procedures.

W008

NOTE: The WARNING and IMPORTANT instructions appearing in this manual are not meant to cover all possible conditions and situations that may occur. It must be understood that common sense, caution and carefulness are factors which CANNOT be built into this tumbler. These factors MUST BE supplied by the person(s) installing, maintaining or operating the tumbler.

Always contact your dealer, distributor, service agent or the manufacturer on any problems or conditions you do not understand.

Locating an Authorized Service Person

Alliance Laundry Systems is not responsible for personal injury or property damage resulting from improper service. Review all service information before beginning repairs.

Warranty service must be performed by an authorized technician, using authorized factory parts. If service is required after the warranty expires, Alliance Laundry Systems also recommends contacting an authorized technician and using authorized factory parts.

Safety Warnings and Decals

SAFETY WARNINGS and decals have been provided in key locations to remind you of important precautions for the safe operation and maintenance of your tumbler. Please take the time to review these warnings before proceeding with service work.

All decals have been designed and applied to withstand washing and cleaning. Decals should be checked periodically to be sure they have not been damaged, removed, or painted. Refer to the ***Parts Manual*** for ordering replacement decals.

Safety Precautions for Servicing Tumblers

- **Disconnect electrical service.**
- **Shut off supply gas valve before servicing gas components.**
- **Access panel MUST be reinstalled after inspection or servicing of tumble dryer is completed.**
- **Use a non-corrosive leak detecting compound to check all pipe connections for gas leaks. DO NOT USE AN OPEN FLAME TO CHECK FOR GAS LEAKS!**
- **Belt guard MUST be reinstalled after inspection or servicing of tumble dryer is completed.**
- **Contactor box cover MUST be reinstalled after inspection or servicing of electric and/or reversing tumble dryer is completed.**
- **Loading door switch MUST be operational before putting tumble dryer into service.**
- **Junction box cover MUST be reinstalled after inspection or servicing of tumble dryer is completed.**

Section 2
Introduction

Model Identification

Information in this manual is applicable to these models:

	Gas			Steam/Thermal Oil		Electric
120 Pound	CA120L	HT120N	PU120L	CT120S	LU120S	CT120E
	CA120N	HU120L	PU120N	CT120T	LU120T	CU120E
	CK120N	HU120N	SA120L	CU120S	PT120S	DR120E2-BT120E
	CT120L	IPD120G2	SA120N	CU120T	PT120T	DR120E2-BU120E
	CT120N	IT120L	SK120N	DR120S2-BT120S	PU120S	GT120E
	CU120L	IT120N	ST120L	DR120S2-BT120T	PU120T	GU120E
	CU120N	KA120L	ST120N	DR120S2-BU120S	ST120S	HT120E
	DR120G2-BA120L	KA120N	SU120L	DR120S2-BU120T	ST120T	HU120E
	DR120G2-BA120N	KK120N	SU120N	GT120S	SU120S	IT120E
	DR120G2-BK120N	KT120L	UA120L	GT120T	SU120T	KT120E
	DR120G2-BT120L	KT120N	UA120N	GU120S	UT120S	KU120E
	DR120G2-BT120N	KU120L	UK120N	GU120T	UT120T	LT120E
	DR120G2-BU120L	KU120N	UT120L	HT120S	UU120S	LU120E
	DR120G2-BU120N	LA120L	UT120N	HT120T	UU120T	PT120E
	GA120L	LA120N	UU120L	HU120S	XT120S	PU120E
	GA120N	LK120N	UU120N	HU120T	XT120T	ST120E
	GK120N	LT120L	XT120L	IPD120S2	XU120S	SU120E
	GT120L	LT120N	XT120N	IT120S	XU120T	UT120E
	GT120N	LU120L	XU120L	IT120T	YT120S	UU120E
	GU120L	LU120N	XU120N	KT120S	YT120T	YT120E
	GU120N	PA120L	YT120L	KT120T	YU120S	YU120E
	HA120L	PA120N	YT120N	KU120S	YU120T	
	HA120N	PK120N	YU120L	KU120T		
	HK120N	PT120L	YU120N	LT120S		
	HT120L	PT120N		LT120T		

(Continued)

(Continued)

	Gas			Steam/Thermal Oil		Electric
170 Pound	CA170L	HT170N	PU170L	CT170S	LU170S	Not Applicable
	CA170N	HU170L	PU170N	CT170T	LU170T	
	CK170N	HU170N	SA170L	CU170S	PT170S	
	CT170L	IPD170G2	SA170N	CU170T	PT170T	
	CT170N	IT170L	SK170N	DR170S2-BT170S	PU170S	
	CU170L	IT170N	ST170L	DR170S2-BT170T	PU170T	
	CU170N	KA170L	ST170N	DR170S2-BU170S	ST170S	
	DR170G2-BA170L	KA170N	SU170L	DR170S2-BU170T	ST170T	
	DR170G2-BA170N	KK170N	SU170N	GT170S	SU170S	
	DR170G2-BK170N	KT170L	UA170L	GT170T	SU170T	
	DR170G2-BT170L	KT170N	UA170N	GU170S	UT170S	
	DR170G2-BT170N	KU170L	UK170N	GU170T	UT170T	
	DR170G2-BU170L	KU170N	UT170L	HT170S	UU170S	
	DR170G2-BU170N	LA170L	UT170N	HT170T	UU170T	
	GA170L	LA170N	UU170L	HU170S	XT170S	
	GA170N	LK170N	UU170N	HU170T	XT170T	
	GK170N	LT170L	XT170L	IPD170S2	XU170S	
	GT170L	LT170N	XT170N	IT170S	XU170T	
	GT170N	LU170L	XU170L	IT170T	YT170S	
	GU170L	LU170N	XU170N	KT170S	YT170T	
	GU170N	PA170L	YT170L	KT170T	YU170S	
	HA170L	PA170N	YT170N	KU170S	YU170T	
	HA170N	PK170N	YU170L	KU170T		
	HK170N	PT170L	YU170N	LT170S		
	HT170L	PT170N		LT170T		
200 Pound	CA200L	HT200N	PU200L	CT200S	LT200T	Not Applicable
	CA200N	HU200L	PU200N	CT200T	LU200S	
	CT200L	HU200N	SA200L	CU200S	LU200T	
	CT200N	IT200L	SA200N	CU200T	PT200S	
	CU200L	IT200N	ST200L	DR200S2-BT200S	PT200T	
	CU200N	LA200L	ST200N	DR200S2-BT200T	PU200S	
	DR200G2-BA200L	LA200N	SU200L	DR200S2-BU200S	PU200T	
	DR200G2-BA200N	LT200L	SU200N	DR200S2-BU200T	ST200S	
	DR200G2-BT200L	LT200N	UA200L	HT200S	ST200T	
	DR200G2-BT200N	LU200L	UA200N	HT200T	SU200S	
	DR200G2-BU200L	LU200N	UT200L	HU200S	SU200T	
	DR200G2-BU200N	PA200L	UT200N	HU200T	UT200S	
	HA200L	PA200N	UU200L	IT200S	UT200T	
	HA200N	PT200L	UU200N	IT200T	UU200S	
	HT200L	PT200N		LT200S	UU200T	

Includes models with the following control suffixes:

R3 – reversing DX4 OPL
RD – reversing DMP OPL
RE – reversing LED OPL
RM – reversing OPL micro
RQ – reversing dual digital timer
RU– reversing UniLinc OPL

Customer Service

If literature or replacement parts are required, contact the source from whom the machine was purchased or contact Alliance Laundry Systems at (920) 748-3950 for the name and address of the nearest authorized parts distributor.

For technical assistance, call (920) 748-3121.

Serial Plate Location

When calling or writing about your product, be sure to mention model and serial numbers. Model and serial numbers are located on serial plate as shown.

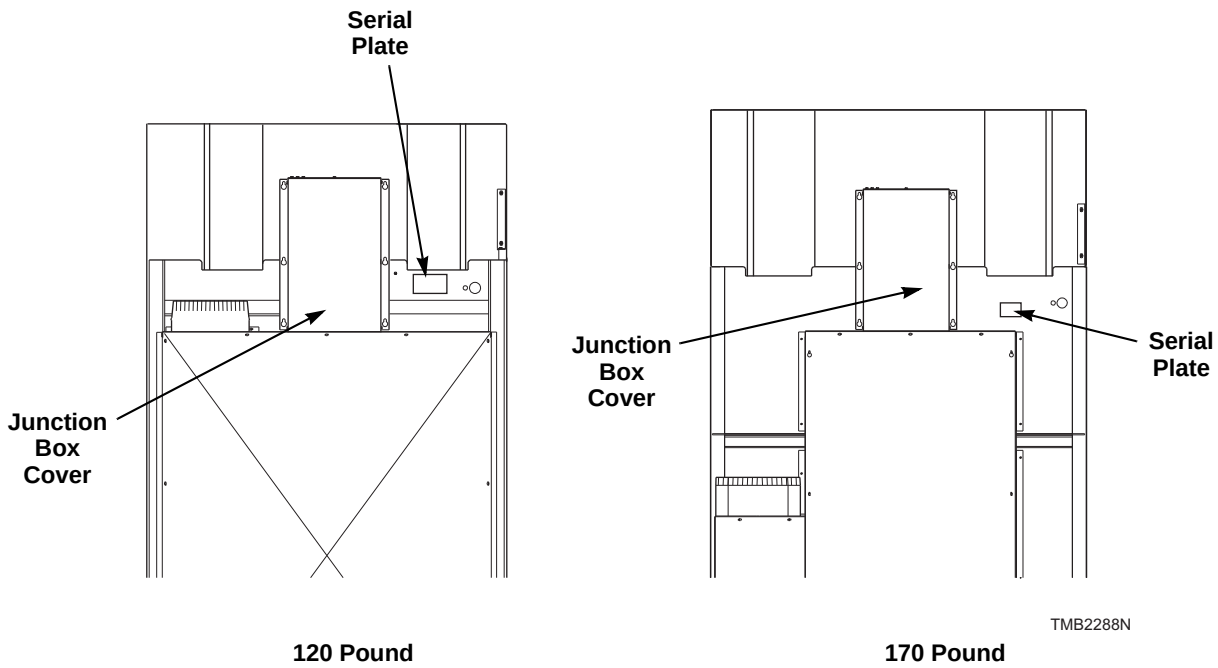

How a Tumble Dryer Works

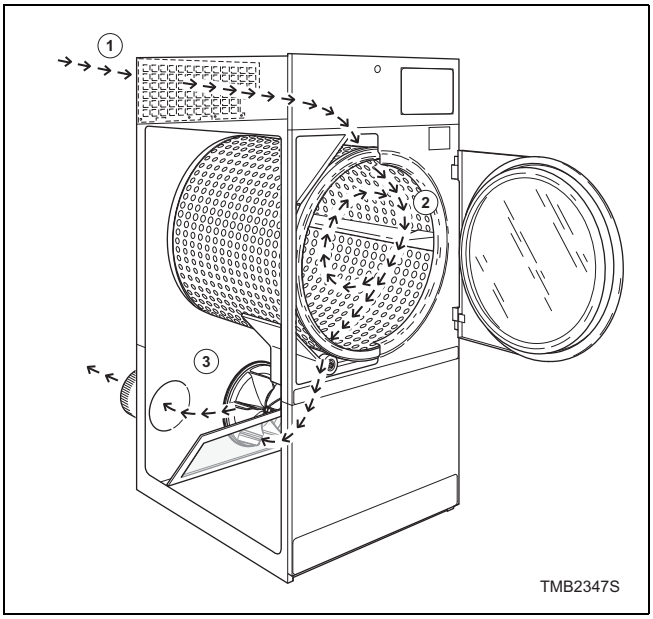

A tumble dryer uses heated air to dry loads of laundry.

① When the motor is started, the exhaust fan pulls room temperature air in through the air intake at the rear of the tumble dryer and over the heat source (burner flame for gas, heating element for electric, and coil for steam).

② The heated air moves into the cylinder, where it is circulated through the wet load by the tumbling action of the cylinder.

③ The air then passes through the lint filter, exhaust fan, and is vented to the outdoors.

Fire Suppression System Theory of Operation

IMPORTANT: The fire suppression system is designed to diminish a laundry fire starting inside a fire suppression system equipped tumble dryer. The fire suppression system is not designed to stop or eliminate high temperature and spontaneous combustion situations. Follow all instructions in the installation manual to ensure the fire suppression system operates properly. Train all operators in the proper preventative maintenance of the fire suppression system.

IMPORTANT: For safety purposes, do not operate tumble dryer if a fire has occurred.

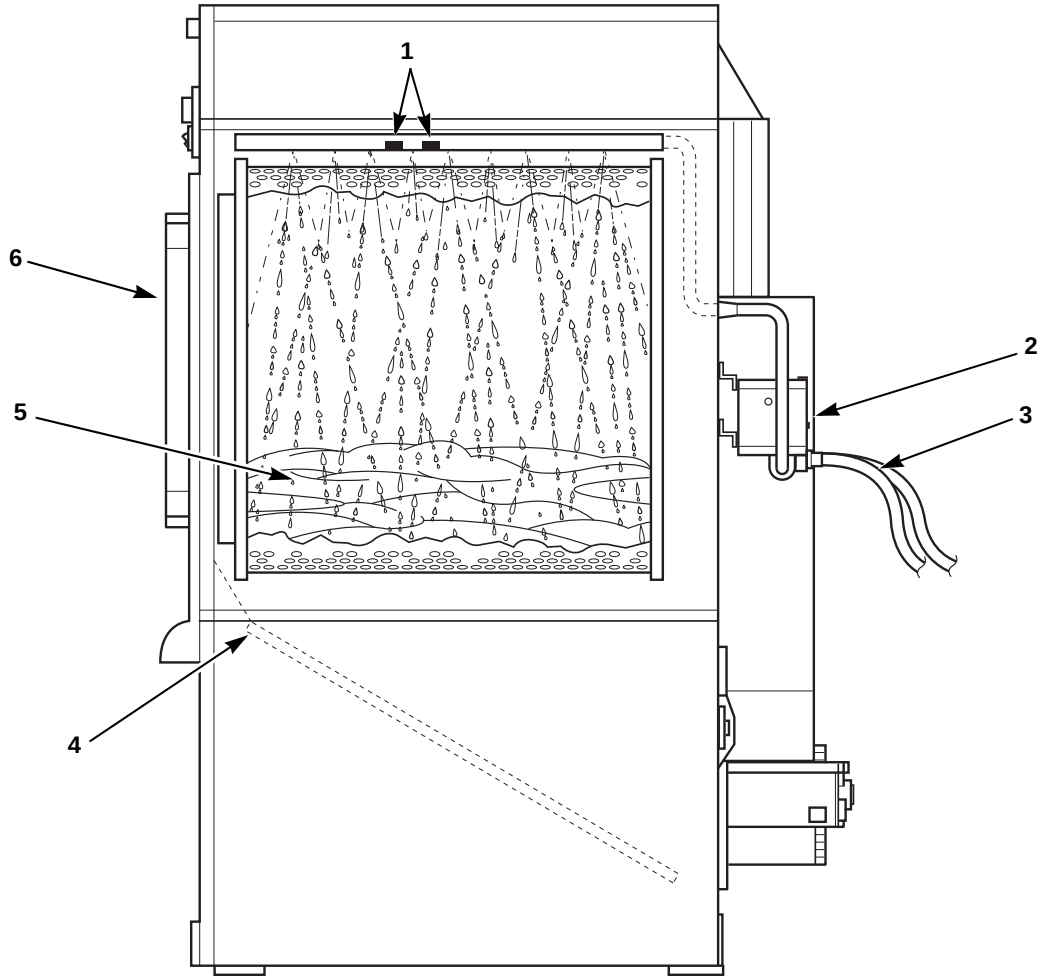

1	Temperature Sensors	**4**	Lint Screen
2	Fire Suppression System Control Box	**5**	Load
3	Water Flow to Machine	**6**	Loading Door

Figure 1

Temperature Sensor

Two temperature sensors are located in the cylinder area of the tumble dryer to provide temperature readings. Refer to *Figure 1* and *Figure 2*. These temperature sensors will trigger a mode change based on a pre-set temperature trip-point.

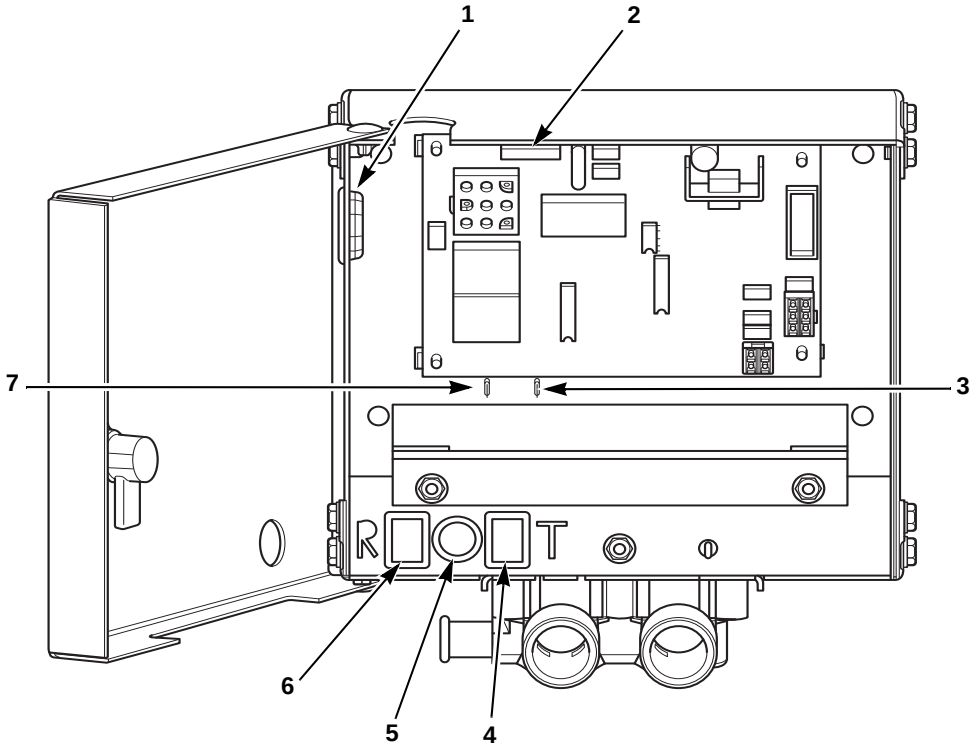

1	Opening for Auxiliary Alarm Cable	**5**	Light
2	Fuse	**6**	Reset Button
3	Auxiliary Alarm Fast-On Connection	**7**	Auxiliary Alarm Fast-On Connection
4	Test Button		

Figure 2

Modes of Operation

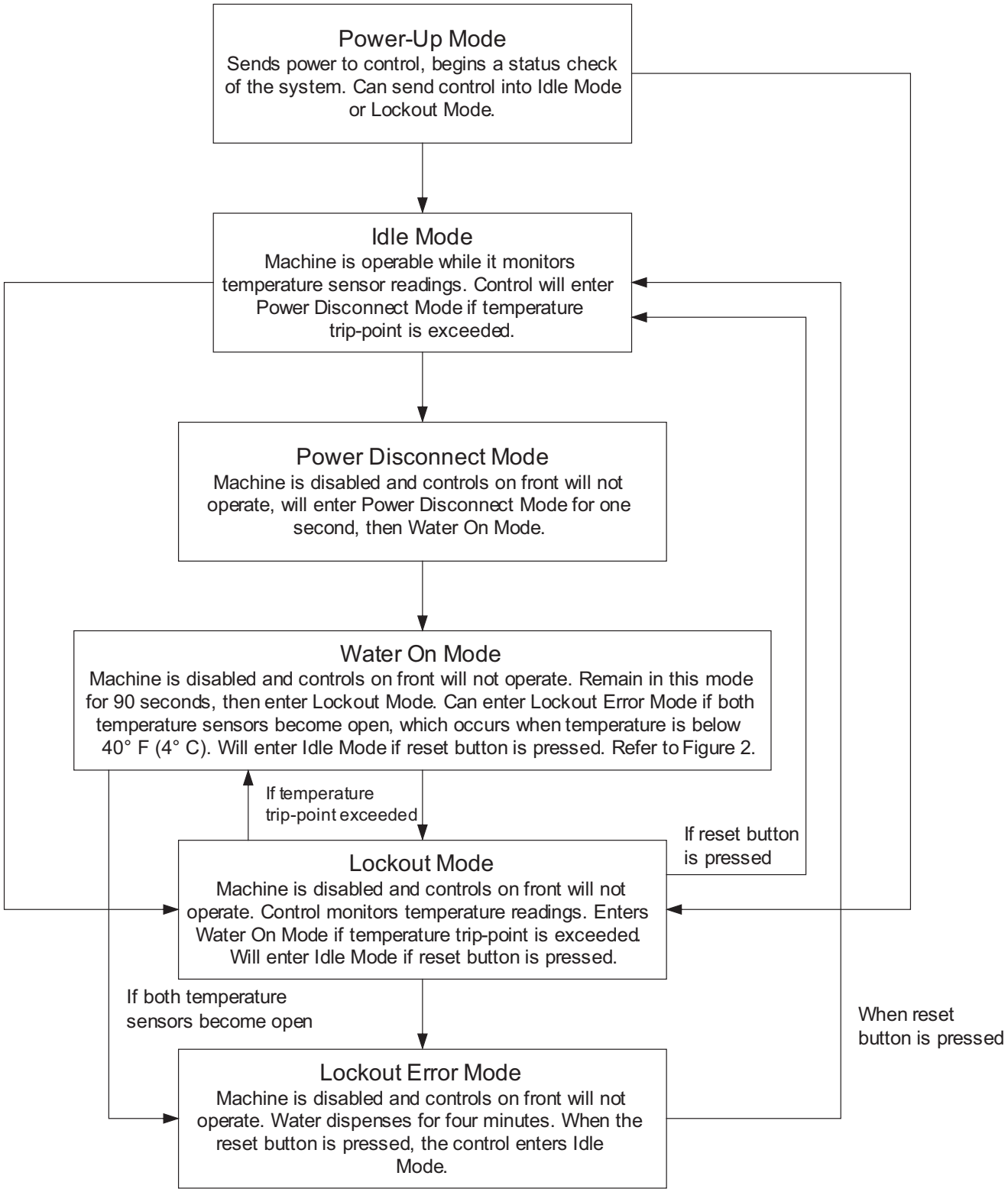

Section 3
Troubleshooting

WARNING

To reduce the risk of electric shock, fire, explosion, serious injury or death:
- **Disconnect electric power to the tumbler before servicing.**
- **Close gas shut-off valve to gas tumbler before servicing.**
- **Close steam valve to steam tumbler before servicing.**
- **Never start the tumbler with any guards/panels removed.**
- **Whenever ground wires are removed during servicing, these ground wires must be reconnected to ensure that the tumbler is properly grounded.**

W002

IMPORTANT: Refer to appropriate wiring diagram for aid in testing tumble dryer components.

1. Motor Does Not Start

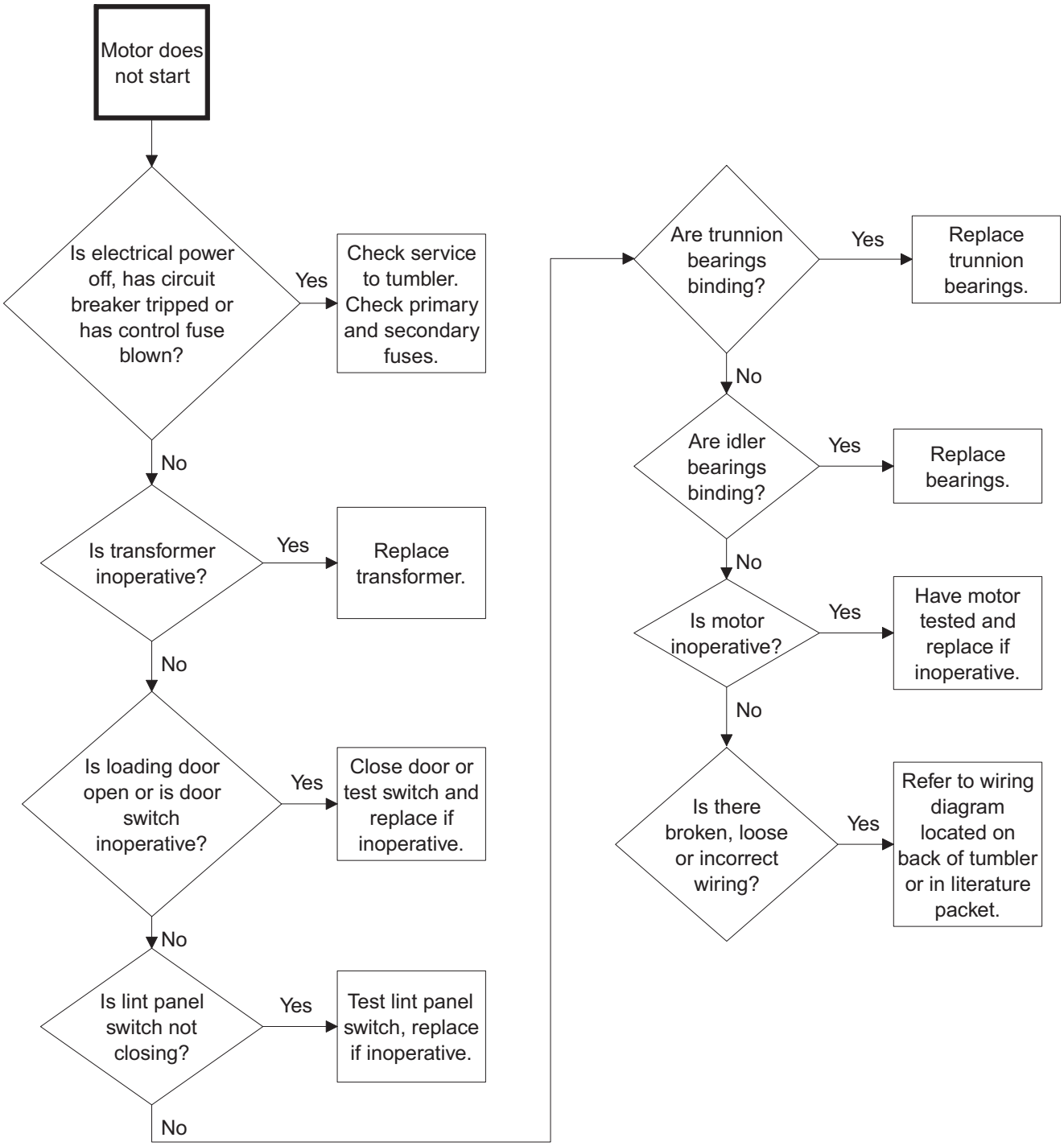

2. Motor Overload Protector Cycles Repeatedly

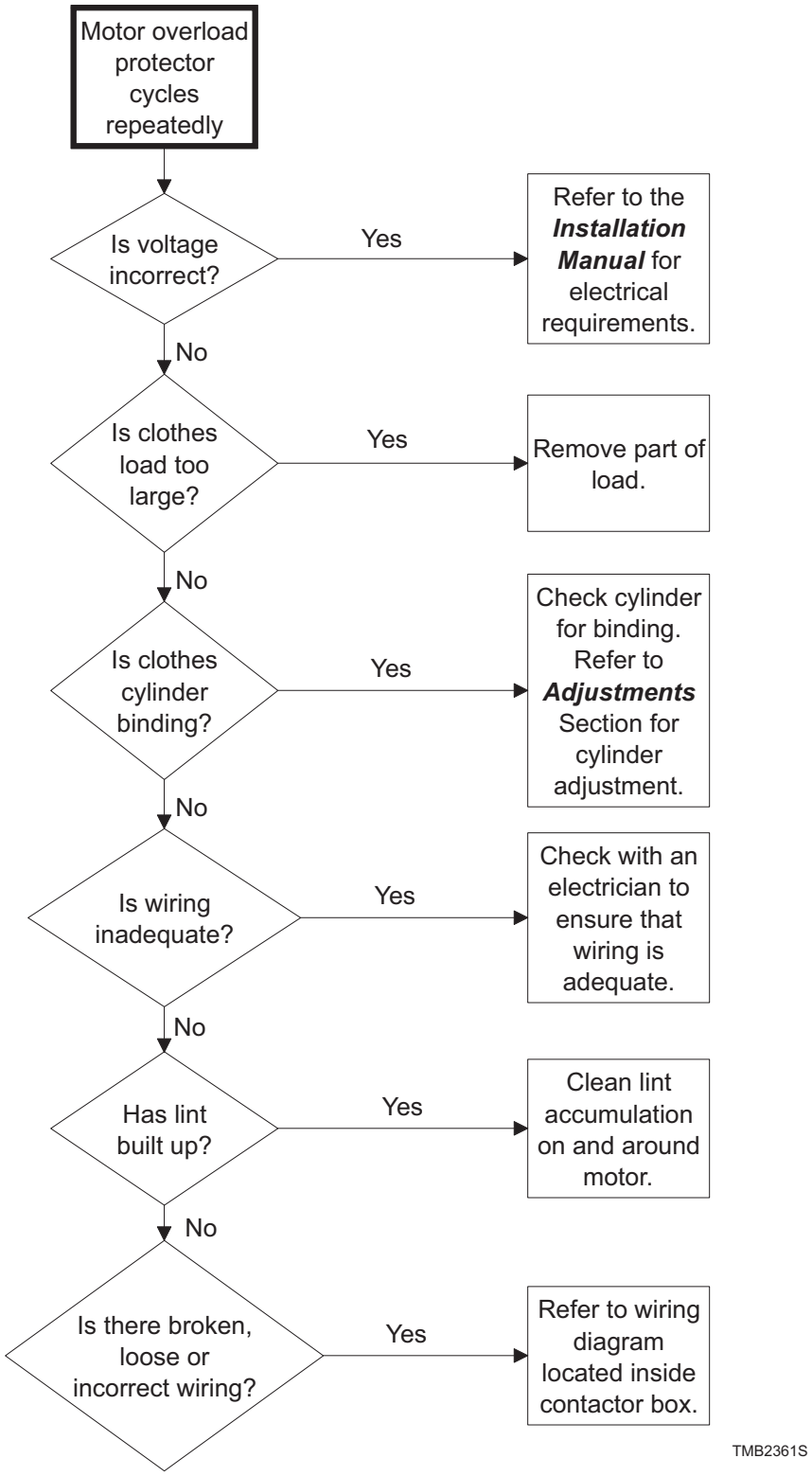

3. Motor Runs But Cylinder Does Not Turn

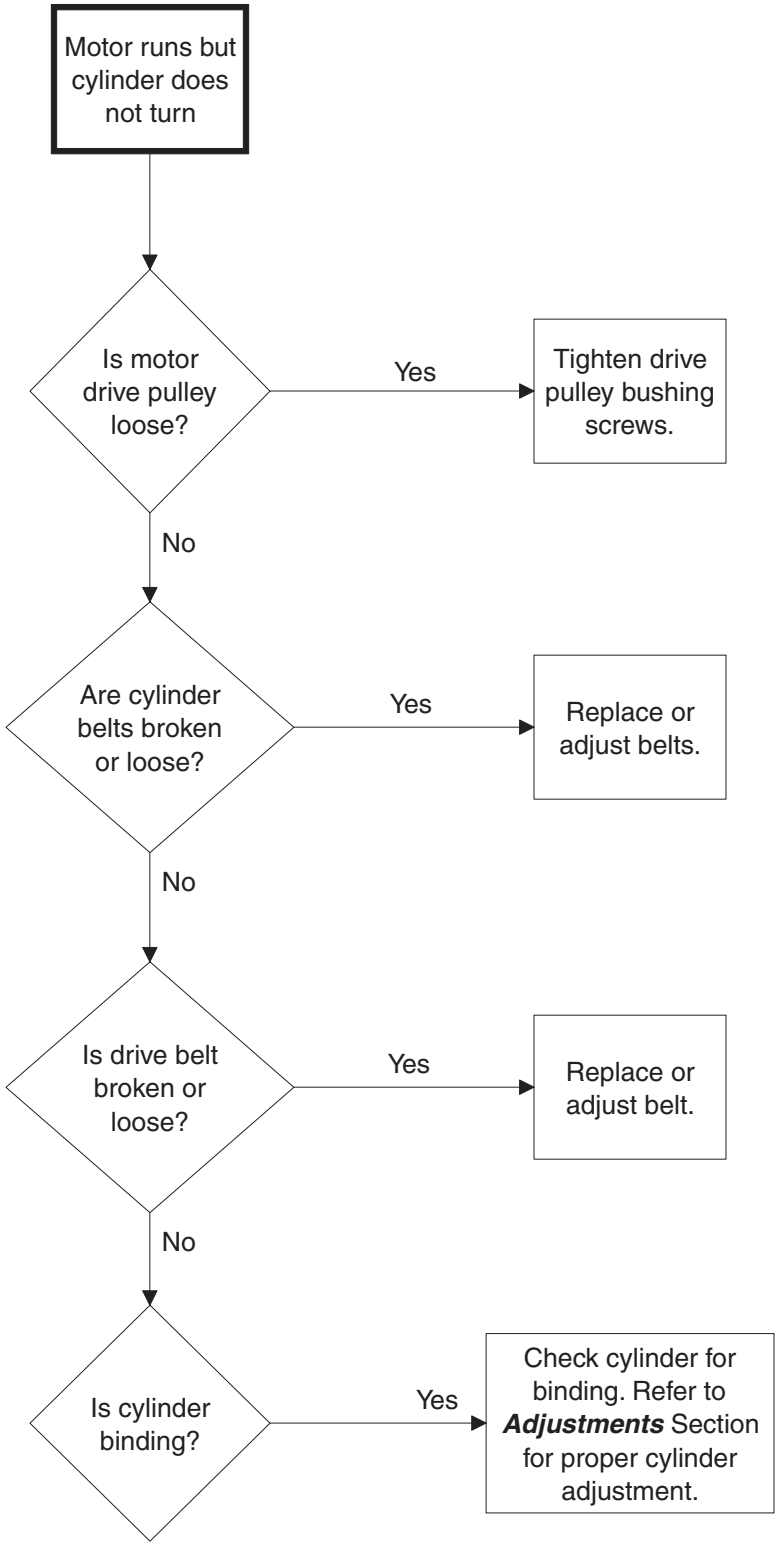

TMB1919S

4. Motor Does Not Stop

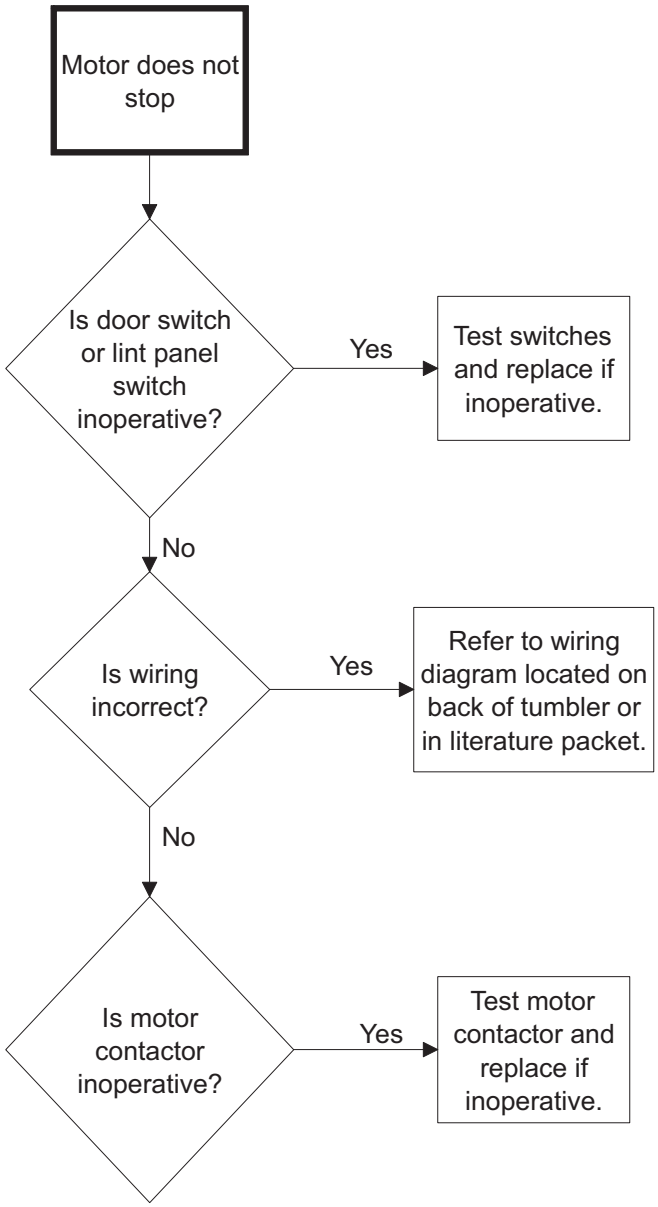

TMB2362S

5. No Heat Condition (Non-CE and Non-Australian Models)

WARNING

To reduce the risk of electric shock, fire, explosion, serious injury or death:
- **Disconnect electric power to the tumble dryer before servicing.**
- **Close gas shut-off valve to gas tumble dryer before servicing.**
- **Close steam valve to steam tumble dryer before servicing.**
- **Never start the tumble dryer with any guards/panels removed.**
- **Whenever ground wires are removed during servicing, these ground wires must be reconnected to ensure that the tumble dryer is properly grounded.**

W002R1

Ignition Control Module Function

There are four components to the ignition system: the module, the spark igniter, the high voltage cable and ground wire. When 24 VAC is applied between the TH and GND terminals on the module, the module will send the high voltage signal to the igniter and 24 VAC to the gas valve coils. Gas will hit the sparking igniter and flame will be established. The igniter being engulfed in flame will create a millivolt electric signal that is sent back to the module by the high voltage cable; this is what the module sees as flame recognition. If the millivolt signal is not at the module in ten seconds, the module will go into safety lockout. The voltage will be cut from the igniter and gas valve coils and will not be restored until voltage is cycled at the module.

Intermittent Heat Test Procedure

On ignition control modules with date codes higher than 08t2, perform the following test.

Start the tumble dryer and run for 10 minutes (verify that the tumble dryer is heating properly). After the 10 minute cycle, re-start the tumble dryer and once again verify the unit is heating. Repeat this procedure 3 times. If the tumble dryer passes this test, the ignition control module is operating properly and SHOULD NOT be changed. Refer to Troubleshooting Manual for additional service procedures.

6. No Heat Condition

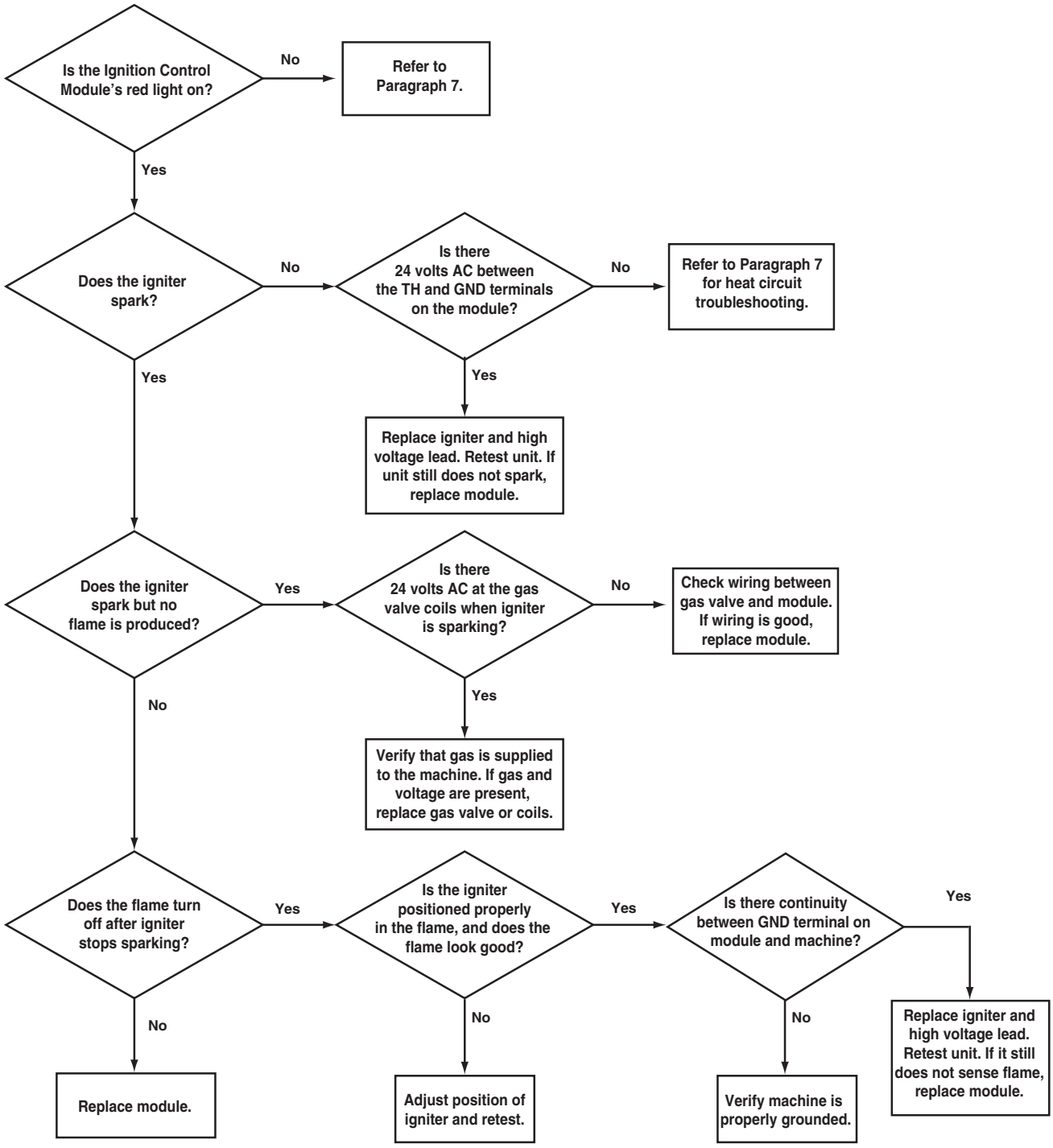

7. Gas Burner Does Not Ignite

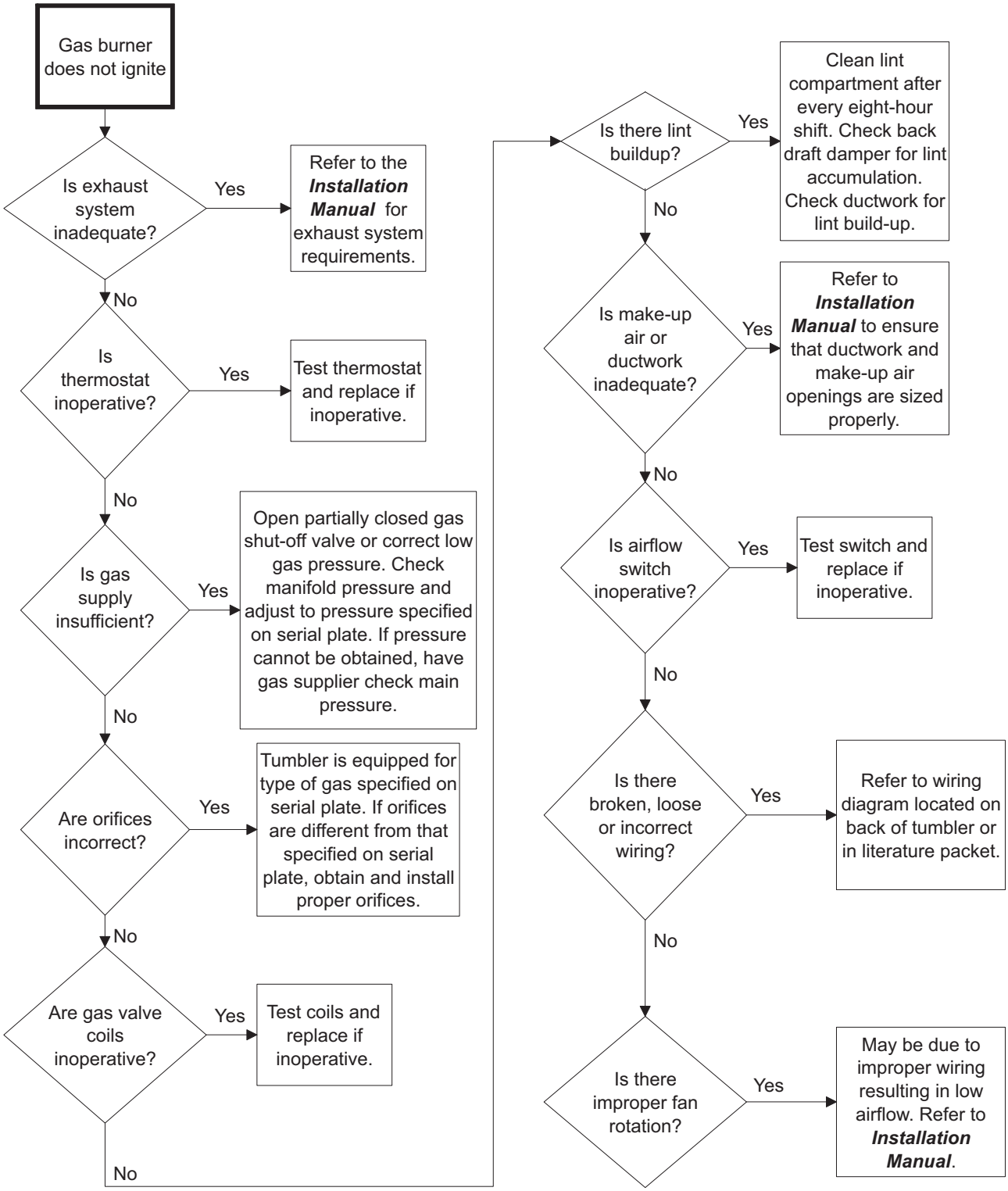

8. Burner Ignites and Goes Out Repeatedly

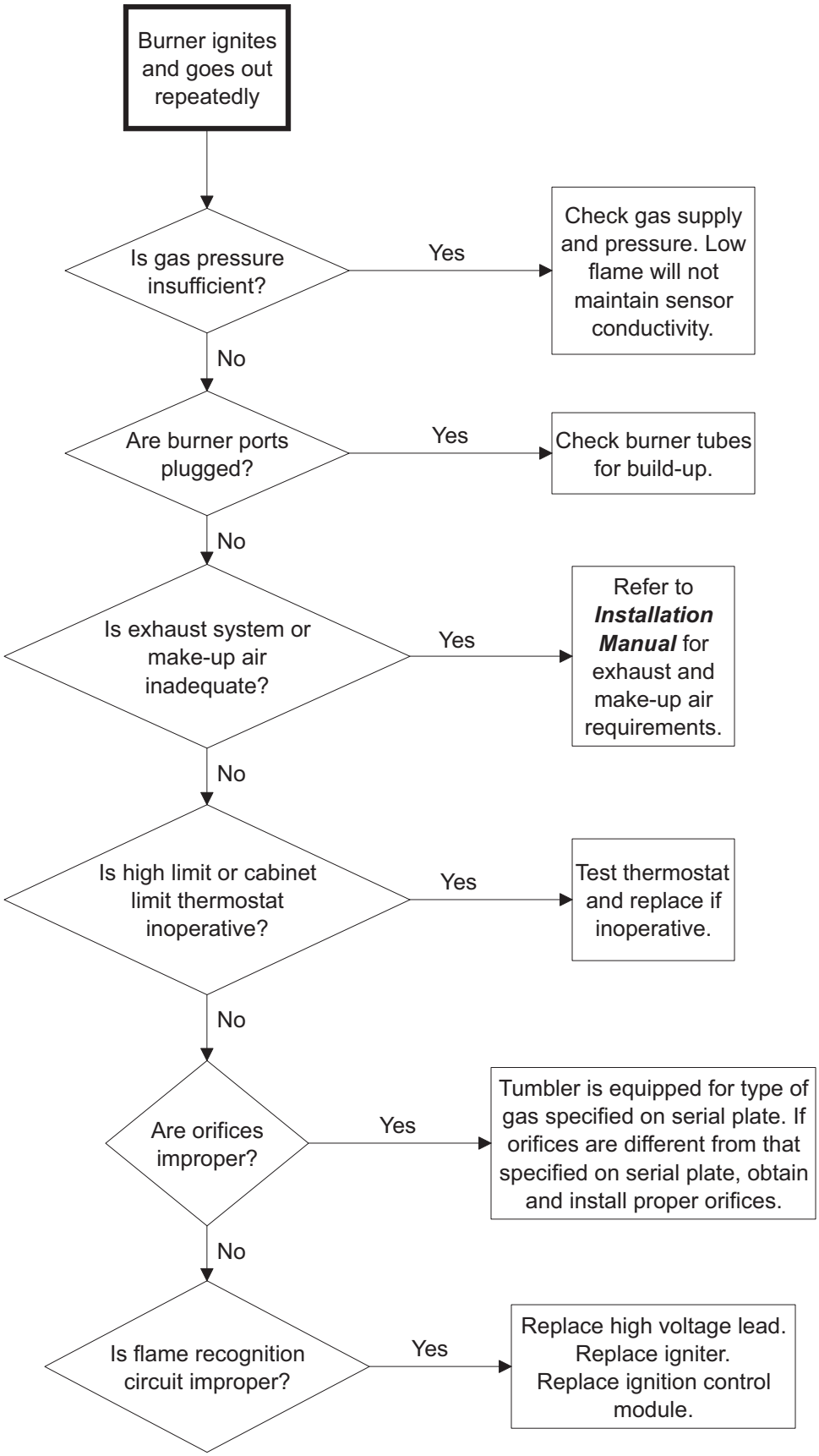

TMB1922S

9. Burner Shuts off Prematurely

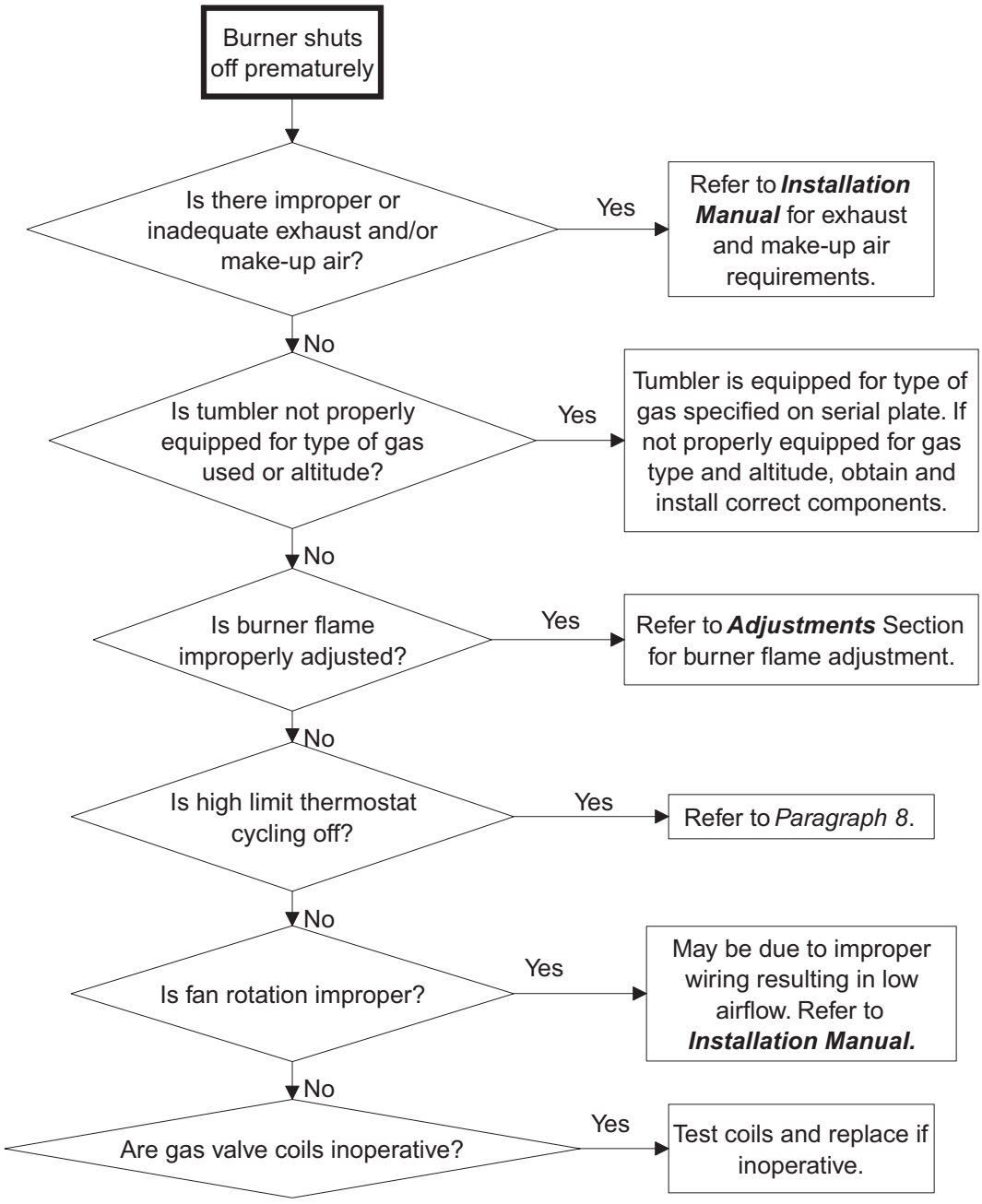

TMB2364S

10. Burner Repeatedly Cycles Off On High Limit Thermostat

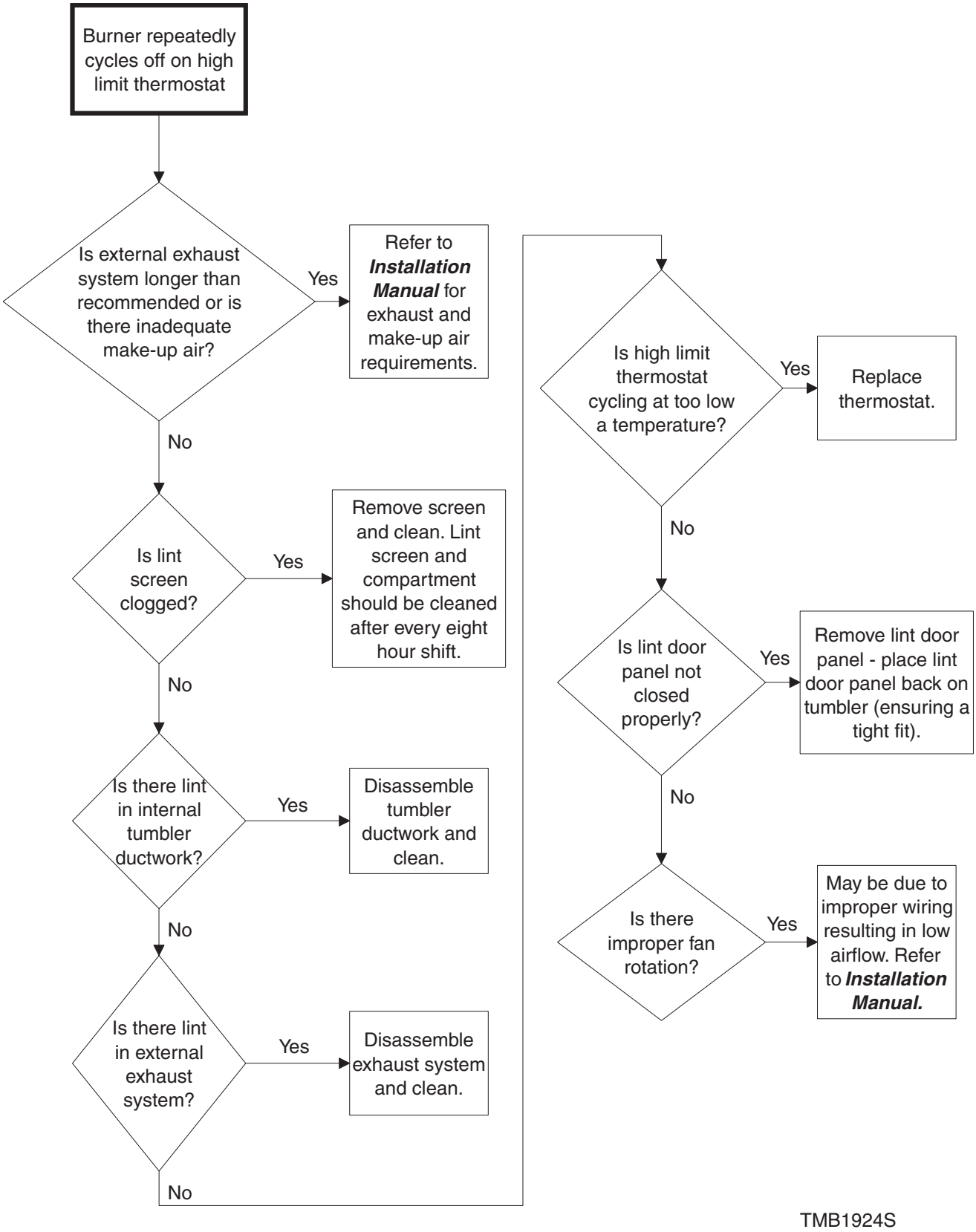

11. Steam Valve or Burner Does Not Shut-off

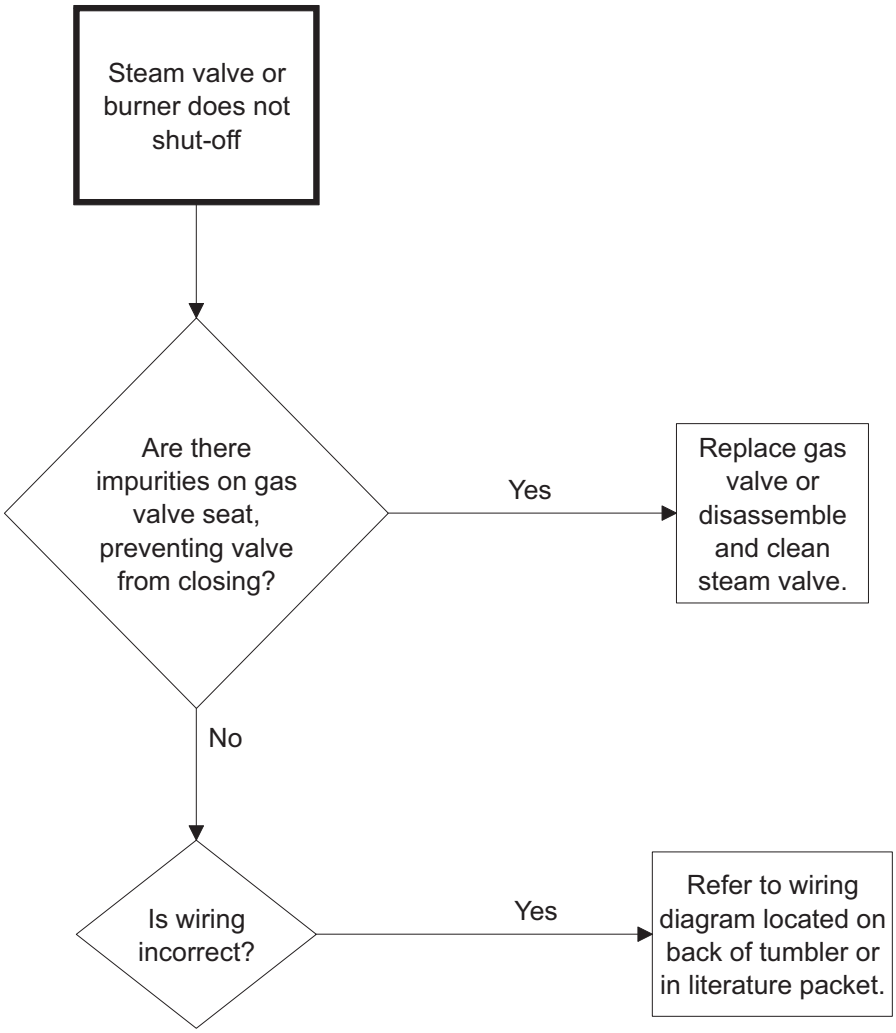

TMB2365S

12. Clothes Do Not Dry

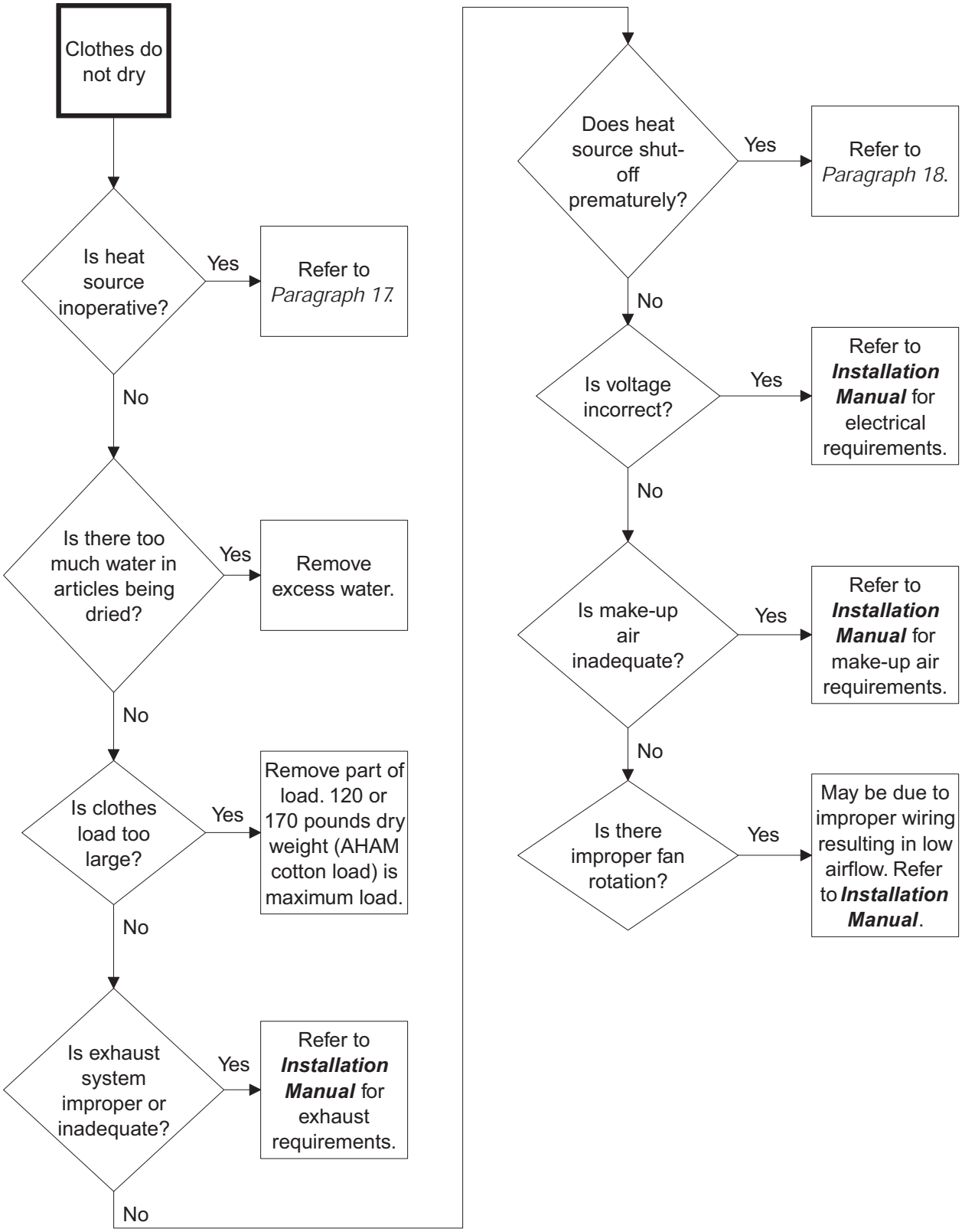

TMB2366S

13. Tumble Dryer Overheating

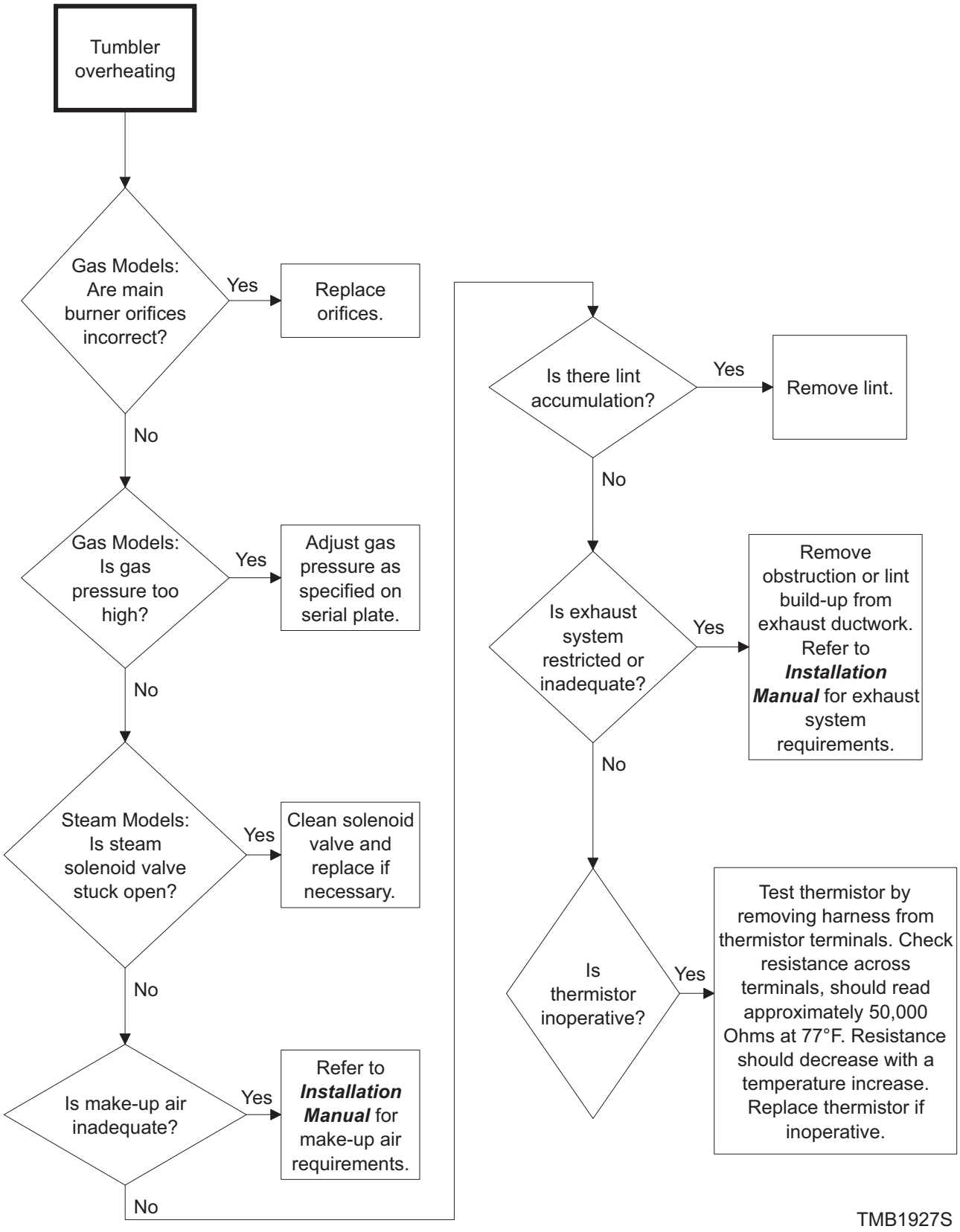

14. Burners Not Burning Properly - Gas Models

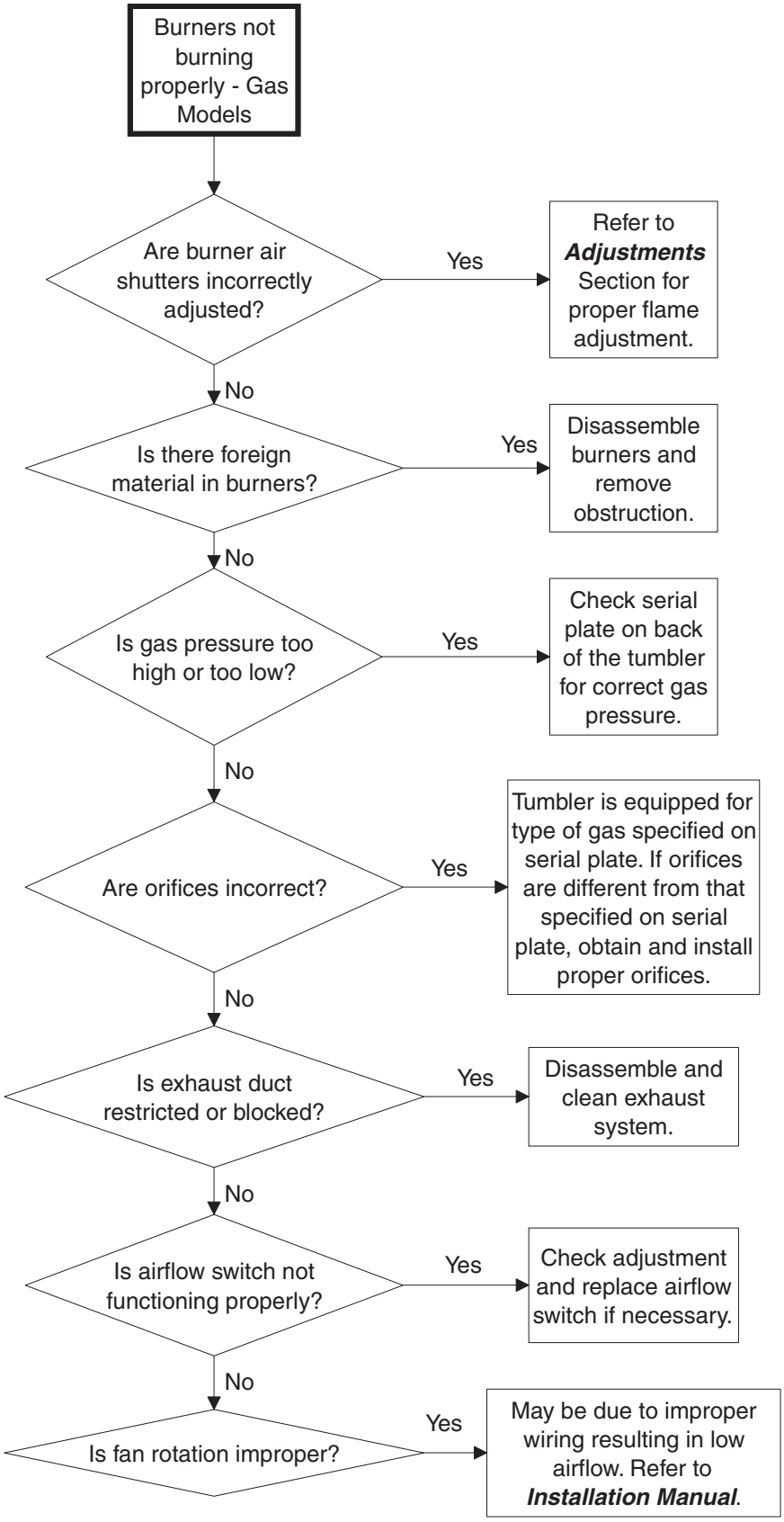

TMB1928S

15. Loading Door Opens During Operation

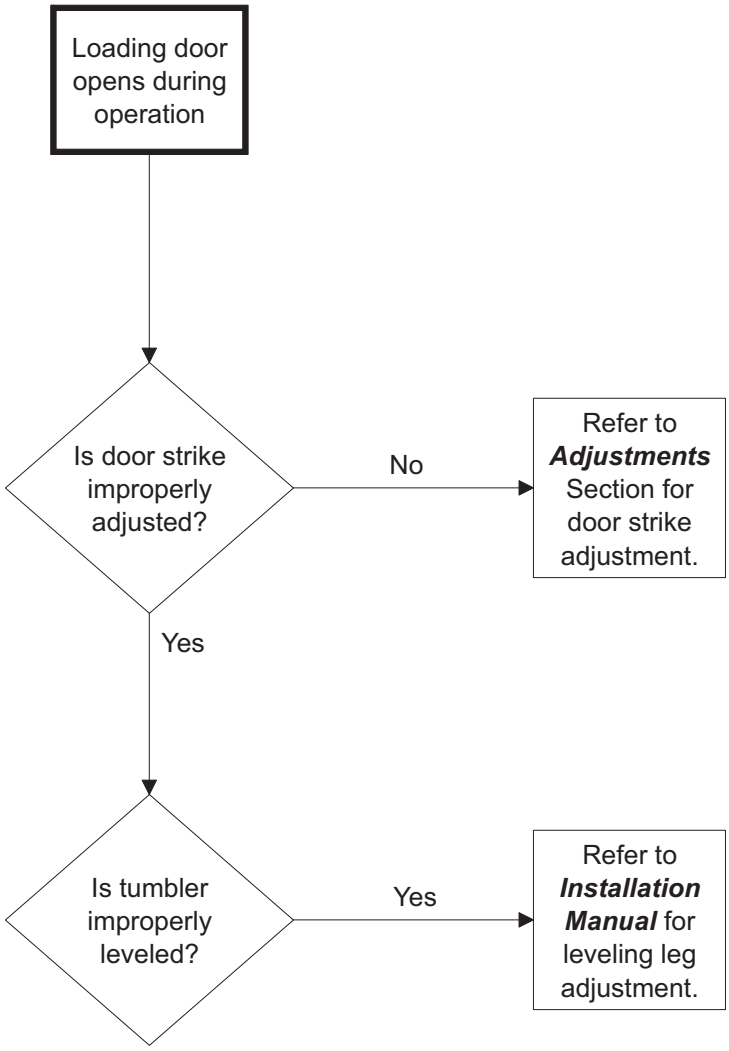

TMB1885S

16. Tumble Dryer Runs But No Steam To Coils – Steam Models

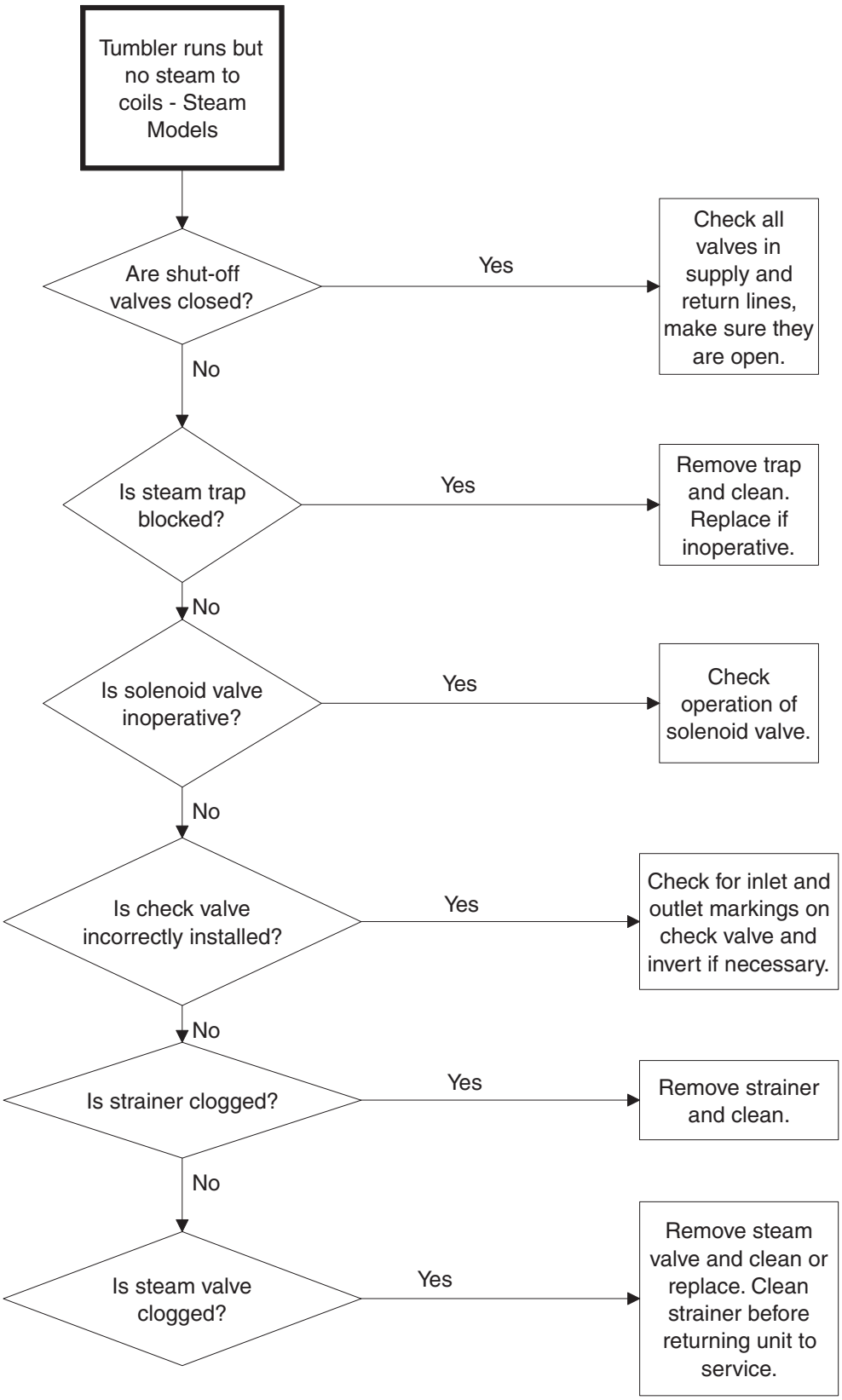

TMB1929S

17. Water In Steam Line – Steam Models

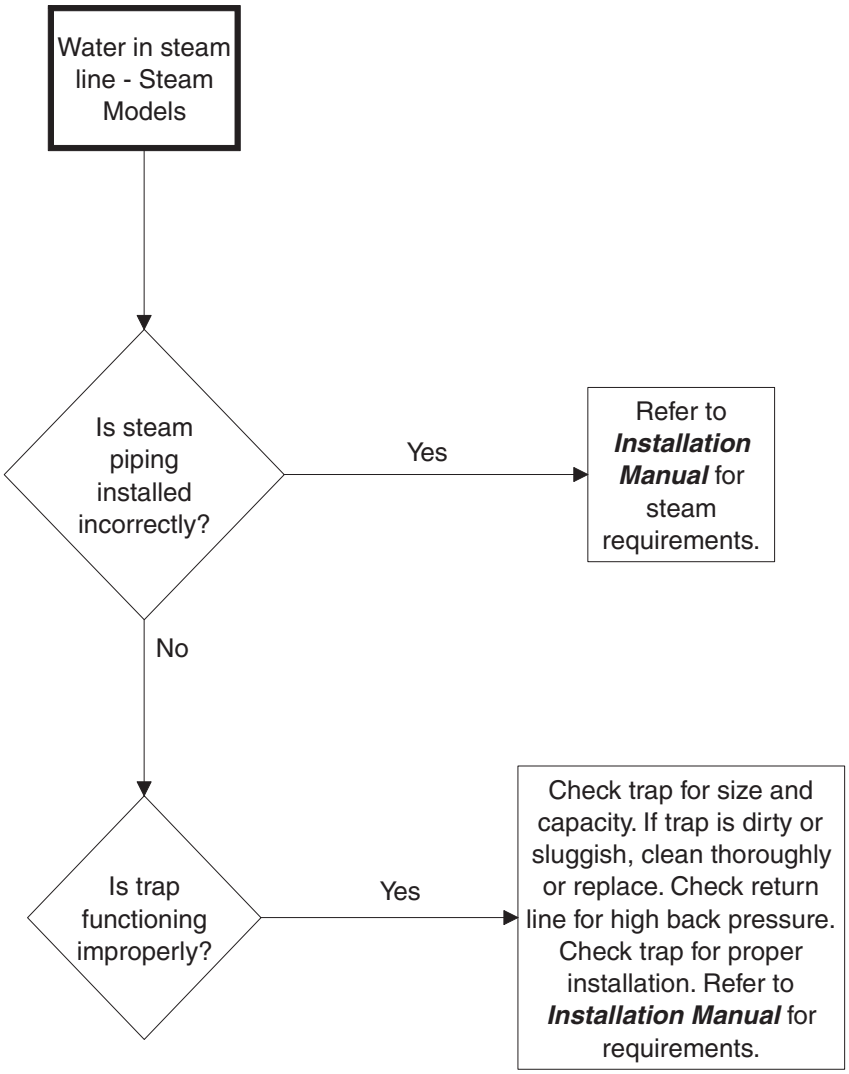

TMB1930S

18. Tumble Dryer Will Not Start, Time On Drying Timer, Door Closed

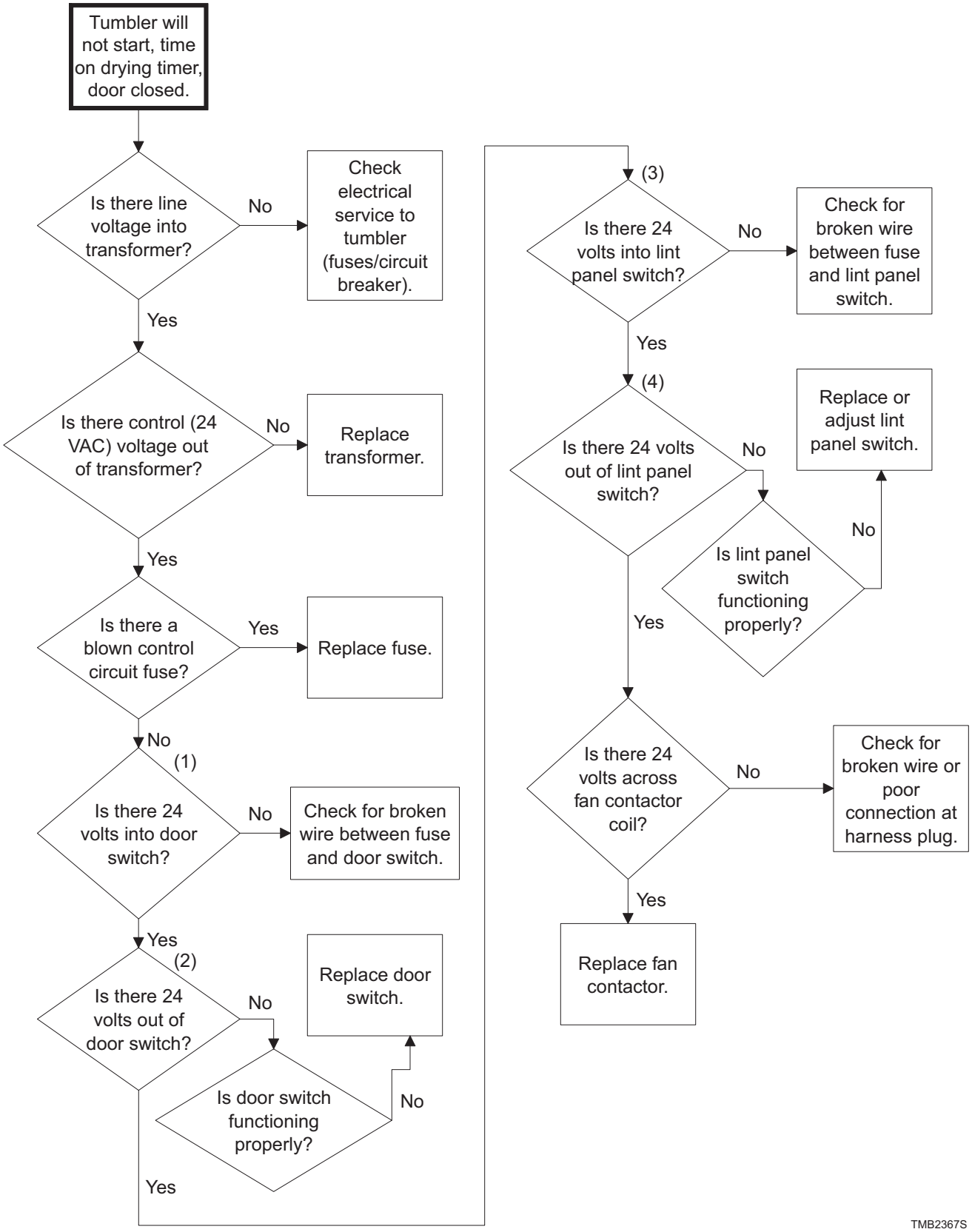

Tumble Dryer Will Not Start, Time On Drying Timer, Door Closed RQ Control

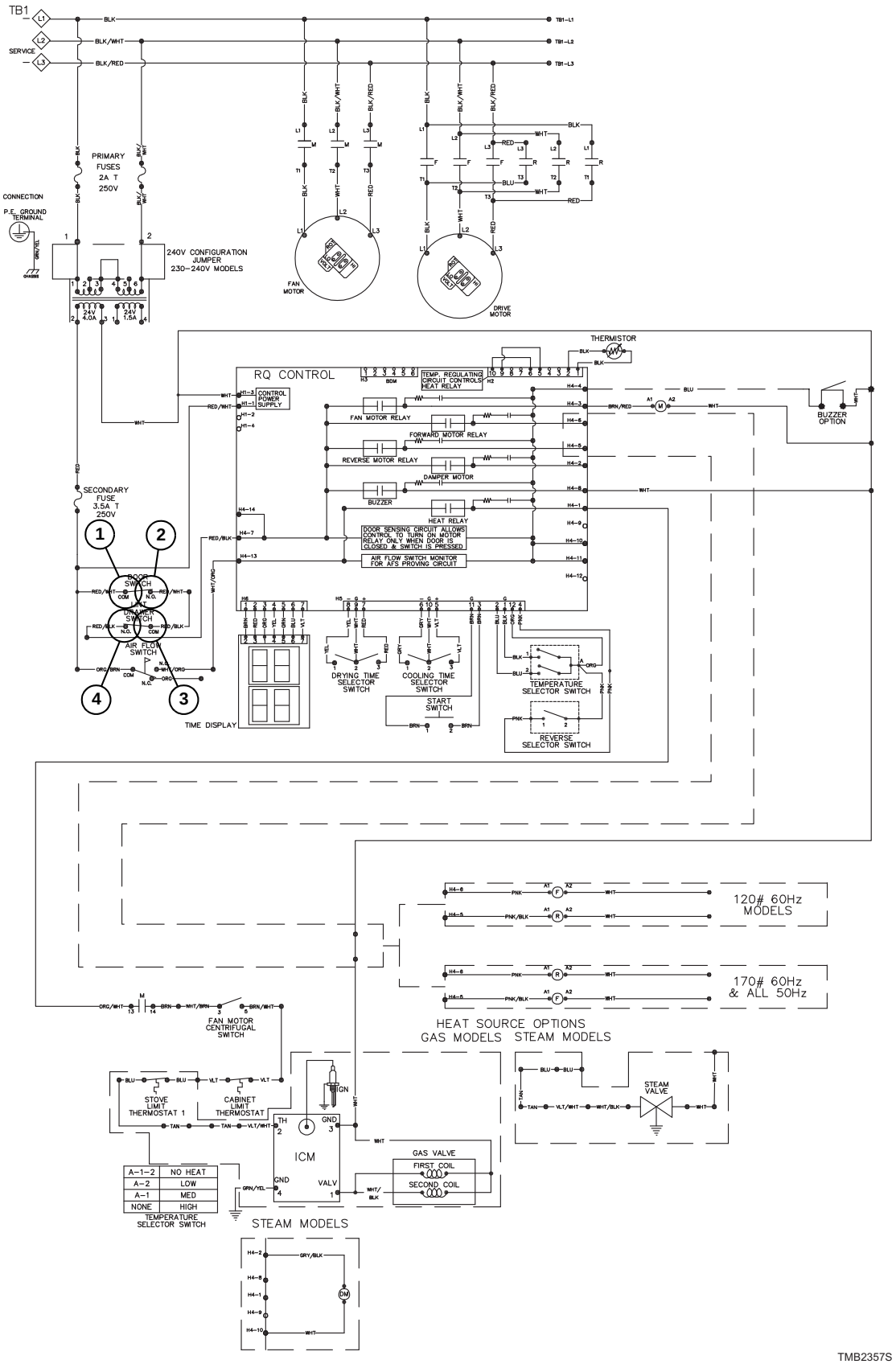

Tumble Dryer Will Not Start, Time On Drying Timer, Door Closed RM Control

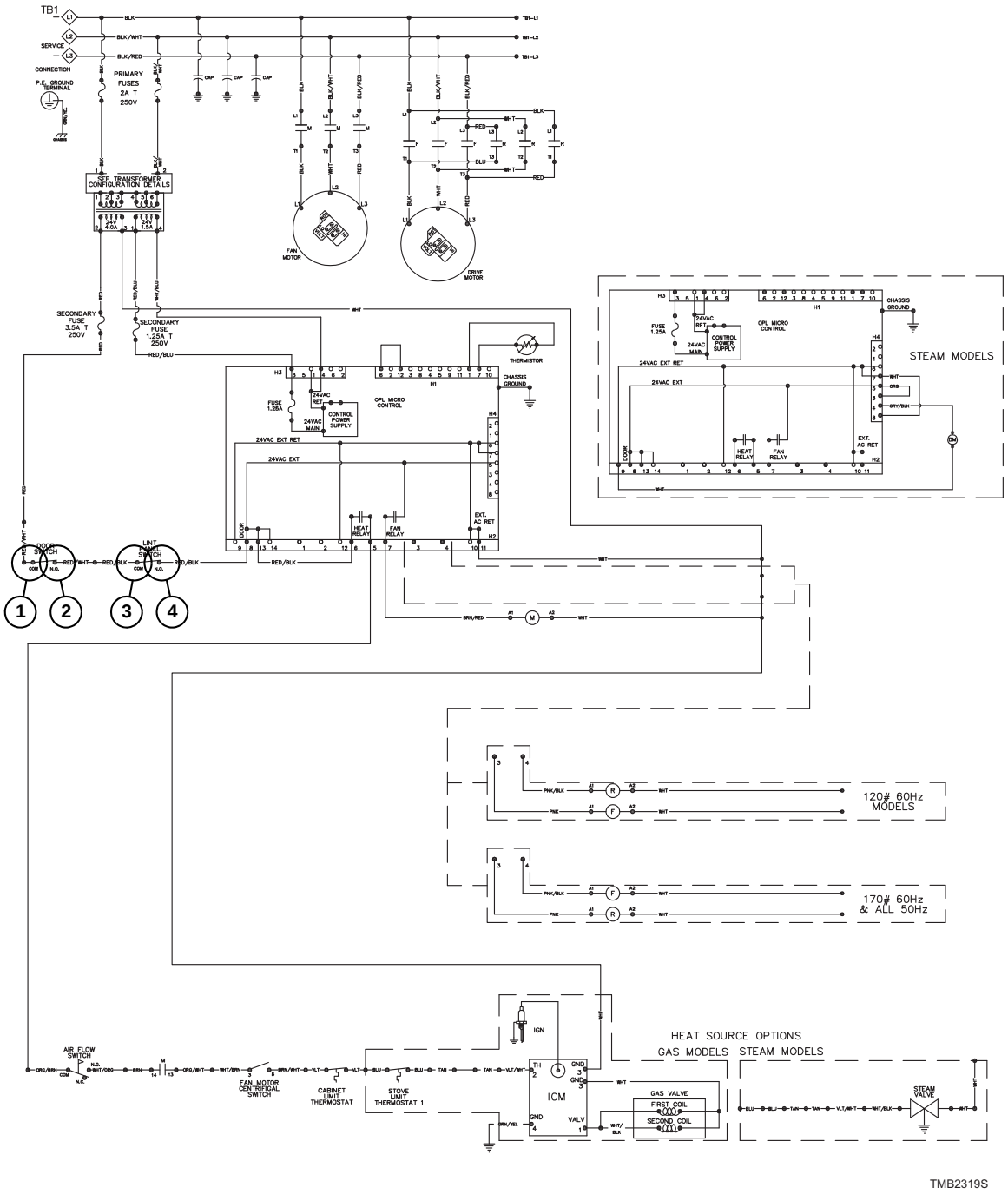

19. Motor Runs But Will Not Heat

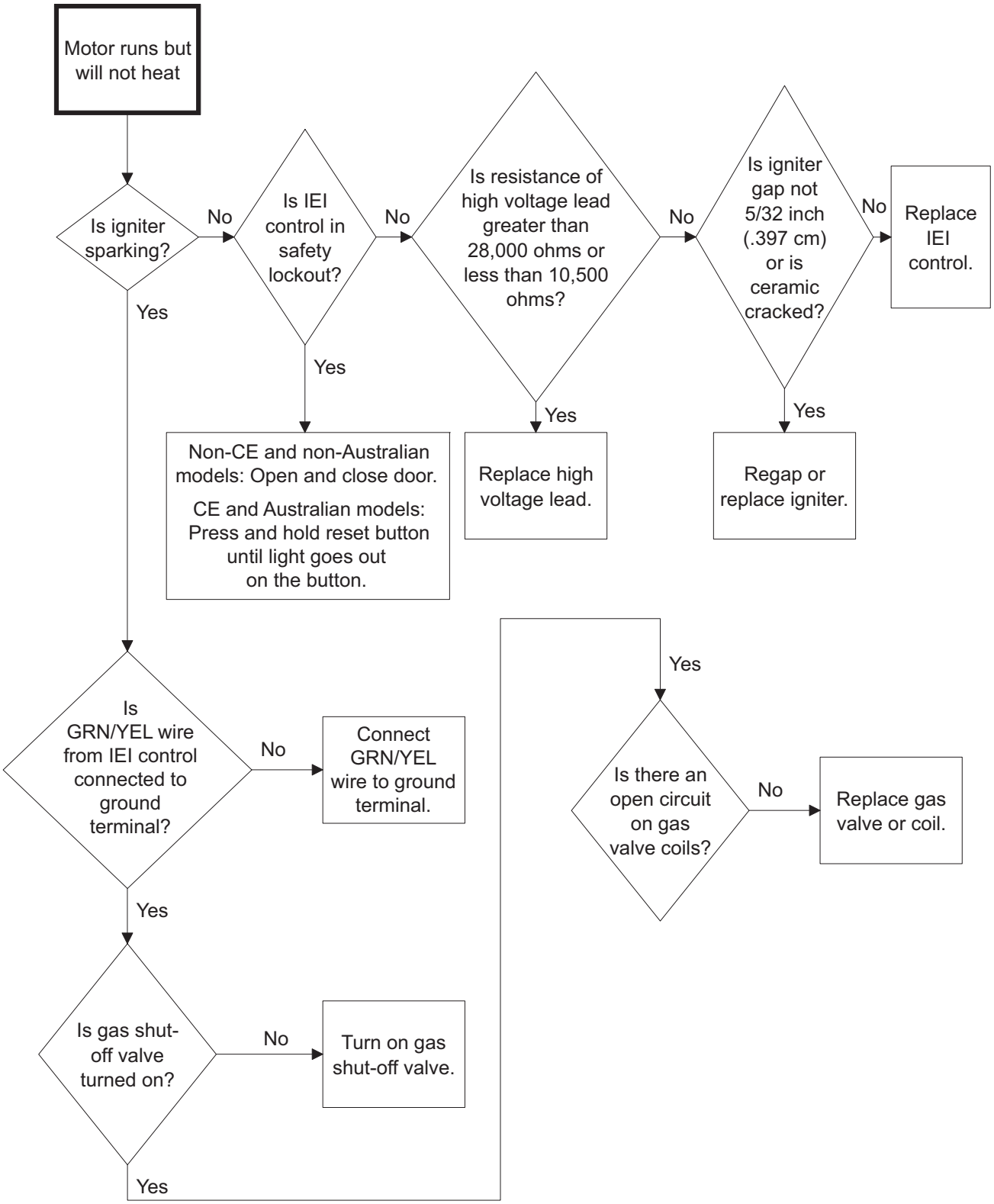

TMB2368S

20. Cylinder Turns, But Will Not Heat

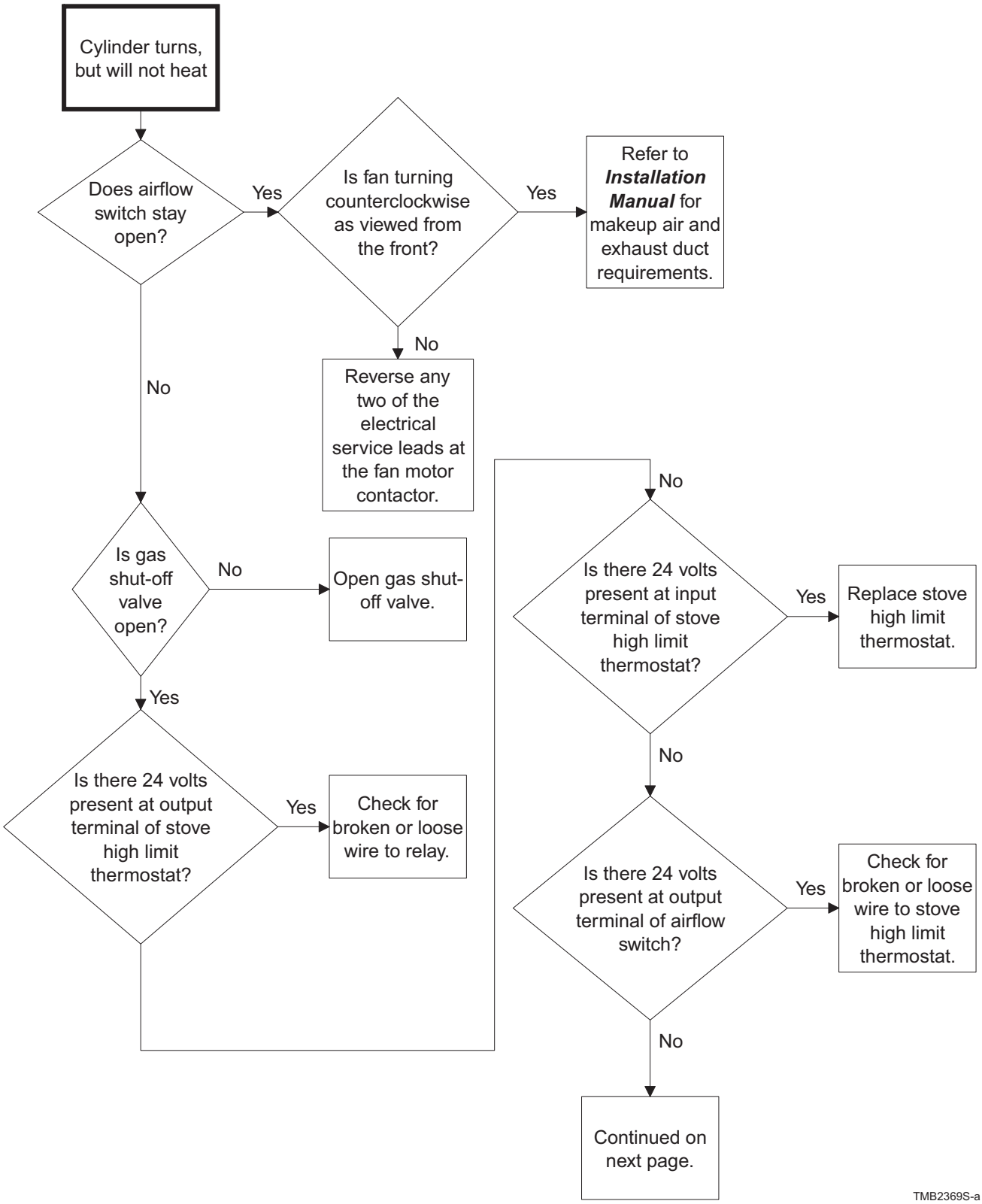

20. Cylinder Turns, But Will Not Heat (continued)

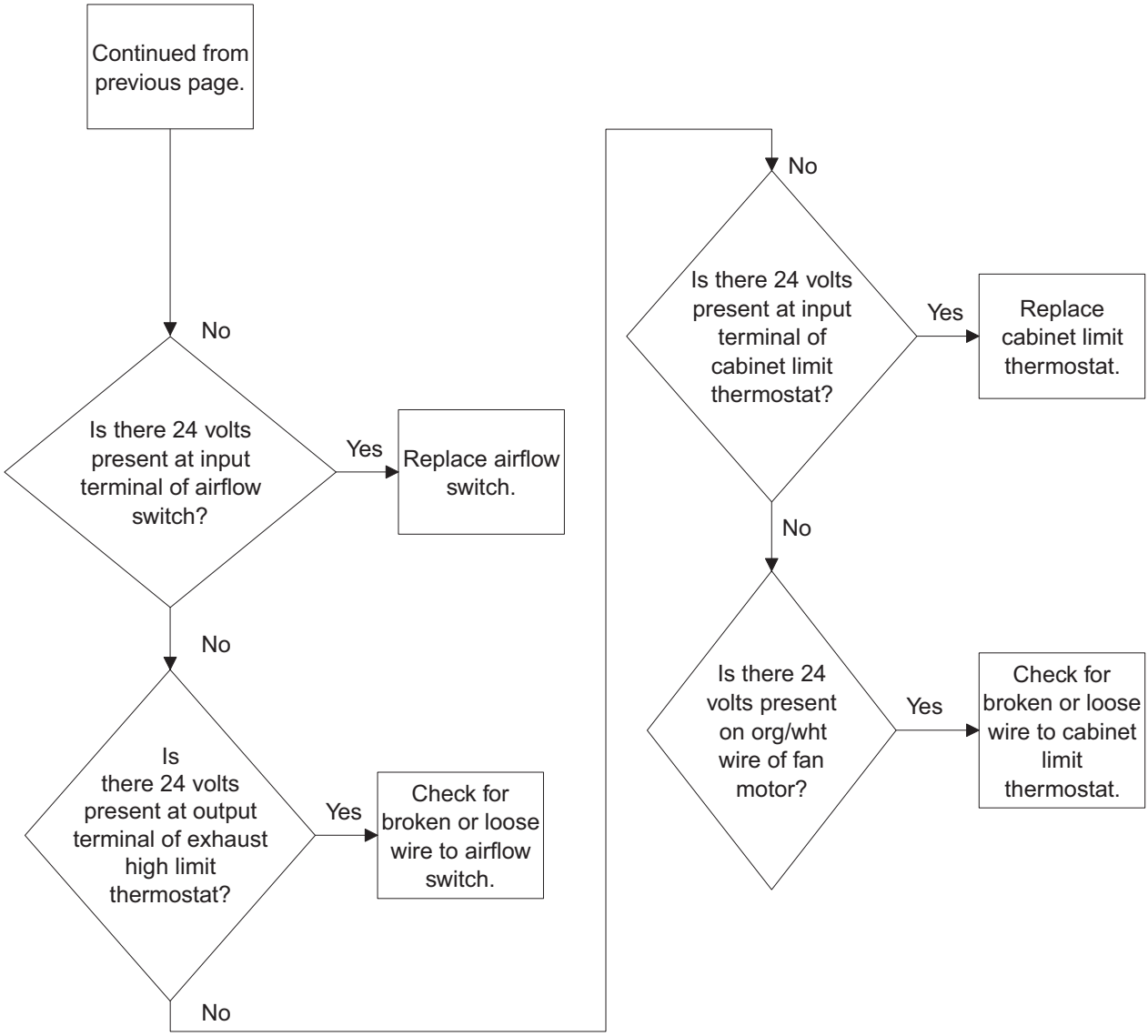

TMB2369S-b

21. Cylinder Is “Stained”

Over time, the cylinder and cylinder backs of tumble dryers can become “stained” from various melted fabrics. These discolored areas can be removed by scrubbing the inside of the cylinder with cleaner and a cleaning pad, such as Scotch- Brite®.

IMPORTANT: Do not use a steel wool pad to clean the cylinder. Steel wool can damage your machine.

Galvanized Cylinders

For galvanized cylinders, use an all-purpose cleaner (such as 409®) and a cleaning pad (such as Scotch-Brite®) to clean the inside of the cylinder.

1. Spray the cleaner on the discolored areas and let soak for a few minutes.
2. Using the pad, scrub the areas until the discoloration is removed.
3. Repeat steps 1-2 as necessary.
4. Thoroughly wipe the entire cylinder after cleaning to insure the cleaner has been removed.

Stainless Steel Cylinders

For stainless steel cylinders, use a heavy duty powder cleanser (such as Zud®) and a cleaning pad (such as Scotch- Brite®) to clean the inside of the cylinder.

1. Using a water spray bottle, wet the cylinder and cylinder back.
2. Sprinkle cleanser onto the pad and scrub the discolored areas.
3. Repeat steps 1-2 as necessary.
4. Thoroughly wipe the entire cylinder after cleaning to insure the cleanser has been removed.

Section 4
Fire Supression System Troubleshooting

WARNING

To reduce the risk of electric shock, fire, explosion, serious injury or death:
- **Disconnect electric power to the tumble dryer before servicing.**
- **Close gas shut-off valve to gas tumble dryer before servicing.**
- **Close steam valve to steam tumble dryer before servicing.**
- **Never start the tumble dryer with any guards/panels removed.**
- **Whenever ground wires are removed during servicing, these ground wires must be reconnected to ensure that the tumble dryer is properly grounded.**

W002R1

A water discharge or system fault is indicated when the fire suppression system control box light is on.

IMPORTANT: When handling electronic controls, use a ground wrist strap. Due to the sensitivity of electronic controls, careful handling is required. Wrist strap, cord and alligator clip are designed to carry away any electrostatic charge from your body and to direct charge to an available ground. By using this static protection device, potential electrostatic discharge problems associated with handling of electronic control will be minimized. Always handle electronic control by its metal edges.

22. Tumble Dryer Does Not Operate and Light Is On

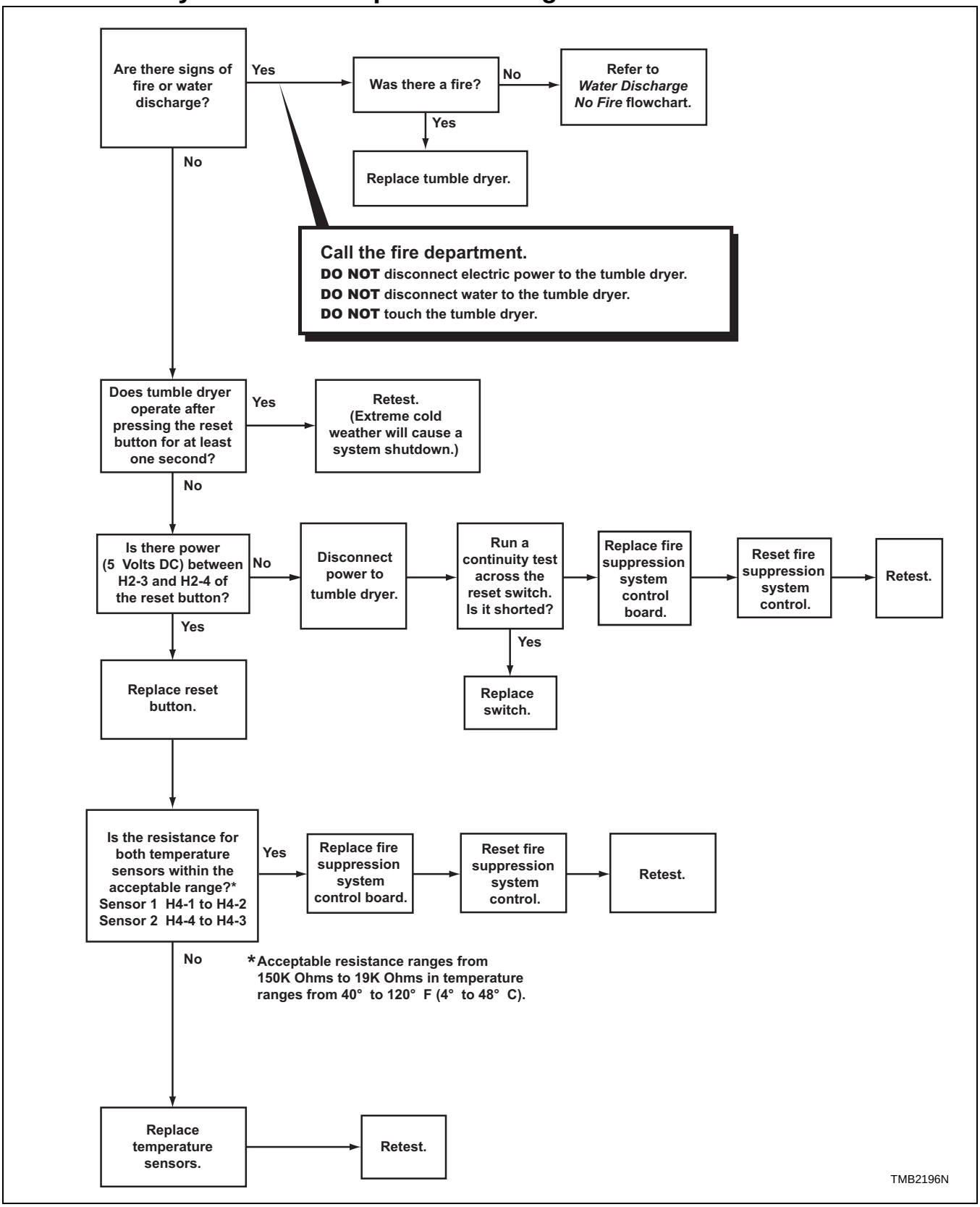

23. Water Discharge, but No Fire

IMPORTANT: Electric Models: If water has discharged into machine, you MUST perform this diagnostic test with NO HEAT to the machine.

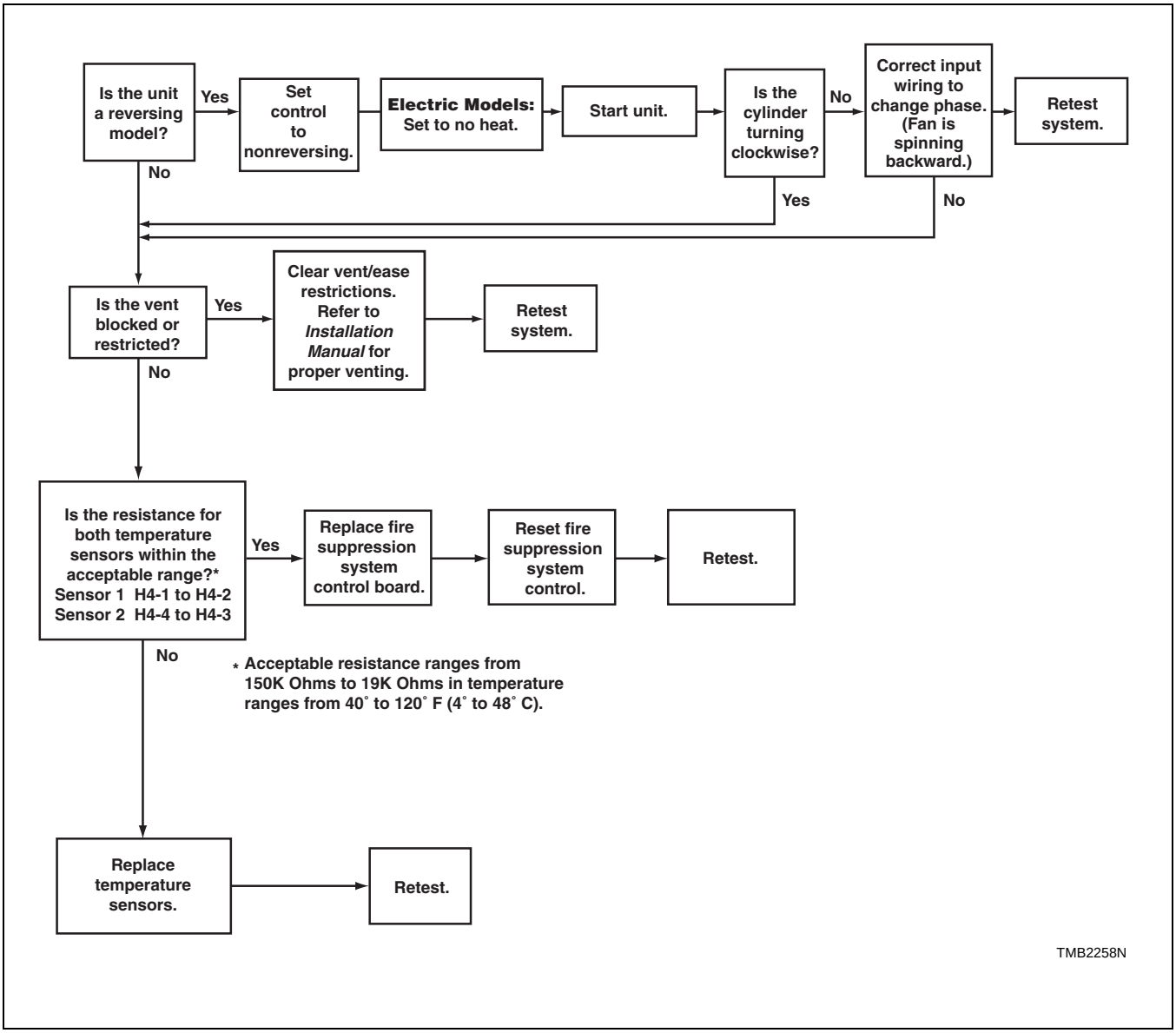

24. Tumble Dryer Does Not Operate and Light Is Off

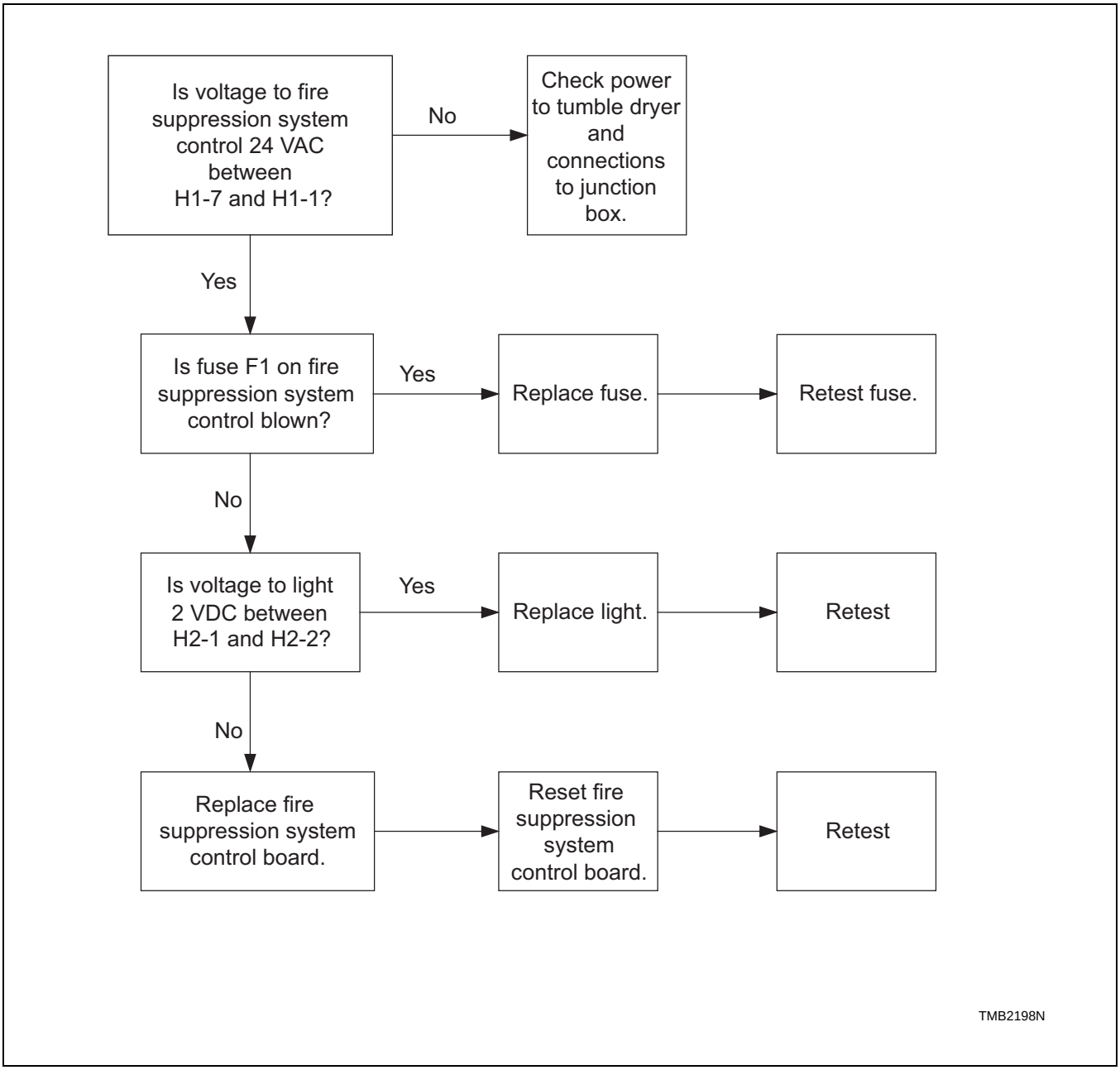

25. Tumble Dryer Operates, but Water Does Not Discharge and Light Is On

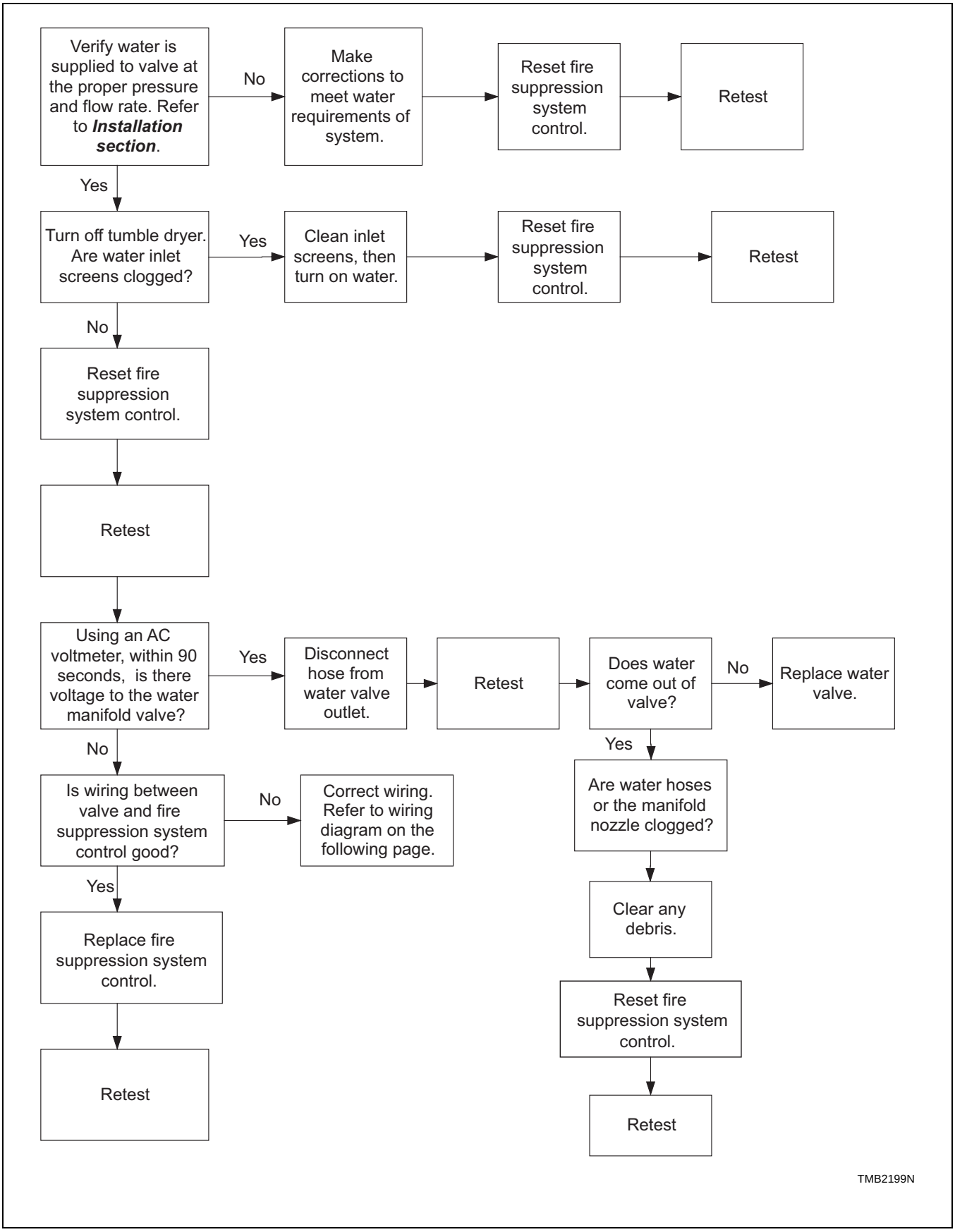

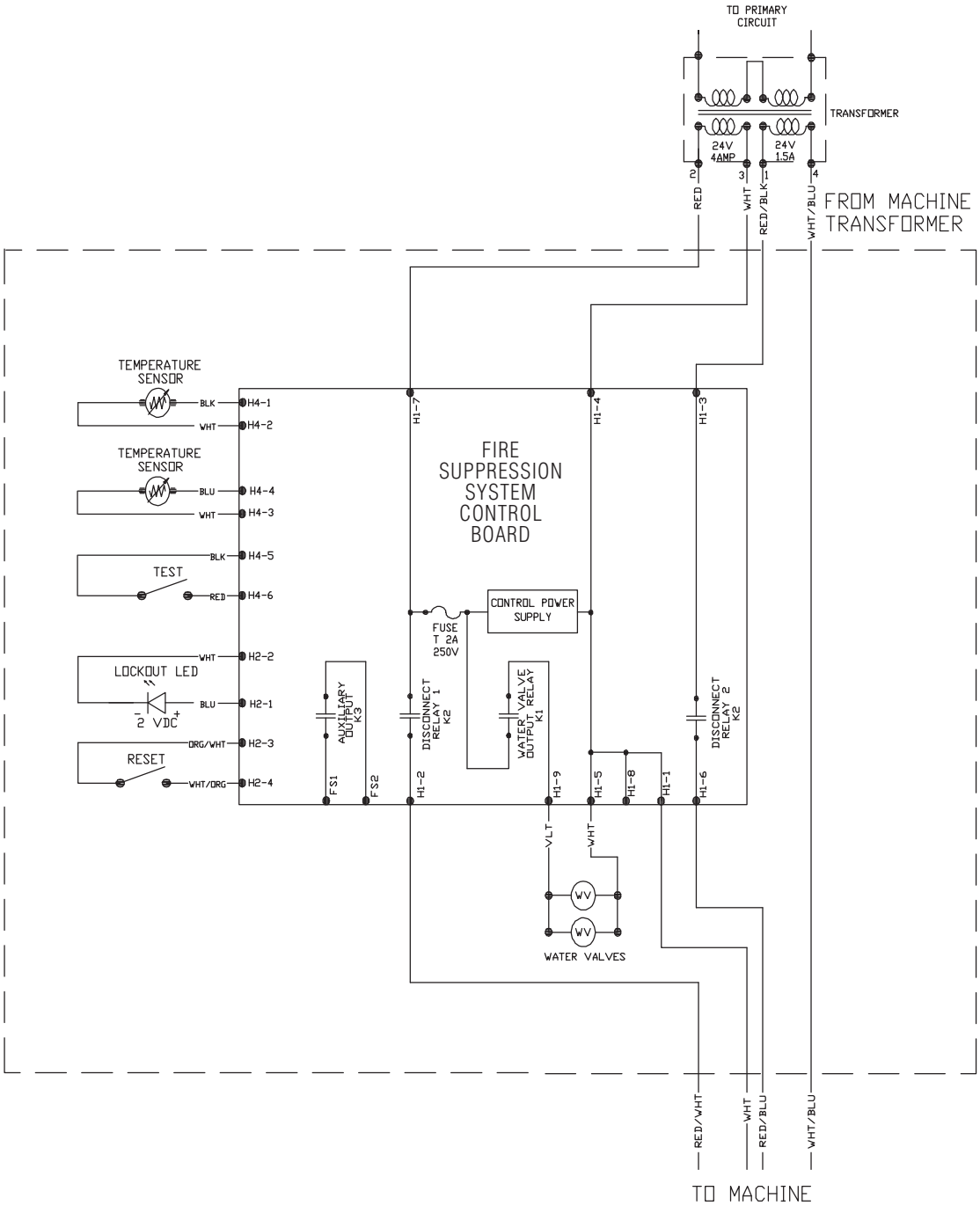

Section 5
Adjustments

WARNING

To reduce the risk of electric shock, fire, explosion, serious injury or death:
- **Disconnect electric power to the tumbler before servicing.**
- **Close gas shut-off valve to gas tumbler before servicing.**
- **Close steam valve to steam tumbler before servicing.**
- **Never start the tumbler with any guards/panels removed.**
- **Whenever ground wires are removed during servicing, these ground wires must be reconnected to ensure that the tumbler is properly grounded.**

W002

26. Main Gas Burner Air Inlet Shutters (All Gas Models)

Refer to *Figure 3*.

CAUTION

The air inlet shutters on the burner must be adjusted so sufficient primary air is metered into the system for proper combustion and maximum efficiency. Before adjusting the inlet shutter be sure that all lint is removed from lint compartment and lint screen.

W281

Air inlet shutter adjustments will vary from location to location and will depend on the vent system, number of units installed, make-up air and line gas pressure. Opening the shutter increases the amount of primary air supplied to the burner while closing the shutter decreases the air supply. Adjust the air shutter as follows:

a. Remove access panel.
b. Start tumbler and check the flame pattern. Correct air and gas mixture is indicated if the flame pattern is primarily blue, with small yellow tips, and bends to the left of the heater section. Too little air is indicated if the flame is yellow, lazy and smokey.
c. To adjust the air inlet shutter, loosen locking screw.
d. Slide shutter in or out as necessary to obtain desired flame intensity.
e. After shutter is adjusted, tighten locking screw securely.
f. If the flame pattern is straight up, insufficient air is flowing through the tumbler. A flame pattern that flares to the right and left indicates that no air is flowing through the tumbler. Check make-up air and exhaust vent. indicates that no air is flowing through the tumbler.

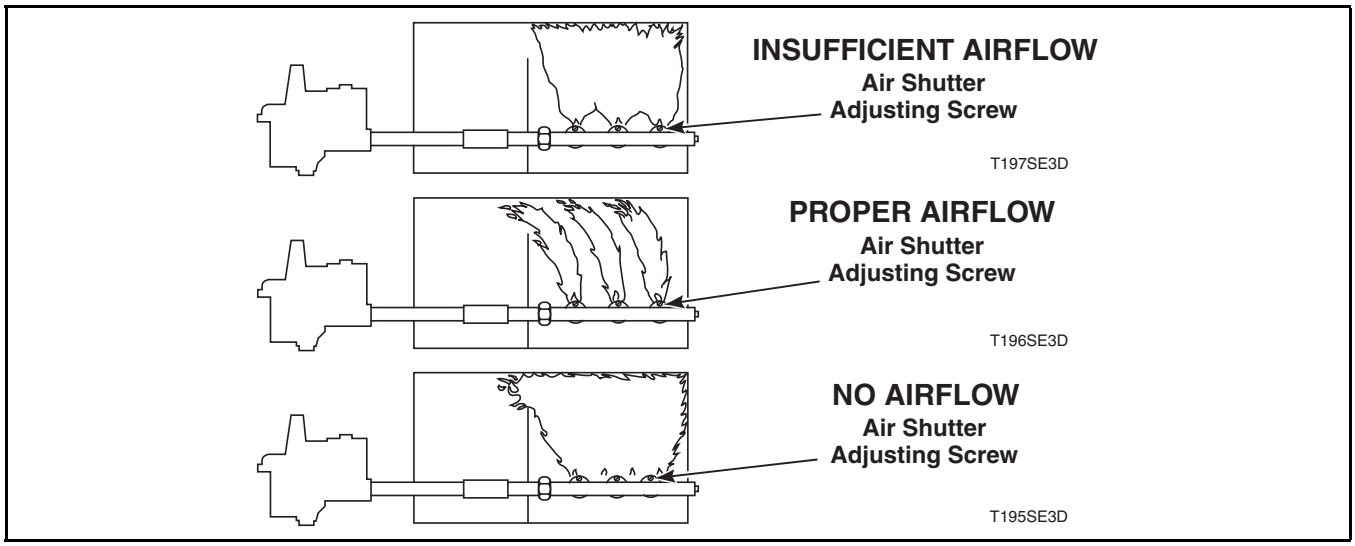

Figure 3

27. Airflow Switch

The airflow switch is set at the factory for proper operation. No adjustment necessary.

The airflow switch operation may be affected by shipping tape still in place, lack of make-up air, or an obstruction in the exhaust duct. These should be checked and the required corrective action taken.

WARNING

The tumble dryer must not be operated if the airflow switch does not operate properly. Faulty airflow switch operation may cause an explosive gas mixture to collect in the tumble dryer.

W072R1

IMPORTANT: Airflow switch vane must remain closed during operation. If it opens and closes during the drying cycle, this indicates insufficient airflow through the tumble dryer. If switch remains open, or pops open and closed during the cycle, the heating system will shut off. The cylinder and fan will continue to operate even though the airflow switch is indicating insufficient airflow.

NOTE: To properly mount the airflow switch bracket, or in case of a load not drying, the airflow switch bracket may need to be checked for proper alignment. Be sure the locator pins are securely in their respective holes before tightening the bracket mounting screws. This will assure proper alignment of the airflow switch arm in the channel of the airflow switch bracket and prevent binding of the arm.

28. Loading Door Catch (120 and 170 Pound Models)

The door catch must be adjusted to have sufficient tension to hold loading door closed against force of load tumbling against it. Proper adjustment is when 0.48-1.03 bar (7-15 pounds) pull is required to open door.

If adjustment is required, refer to *Figure 5* and proceed as follows:

To adjust, open door, loosen acorn nut and turn door strike screw in or out as required. Tighten acorn nut.

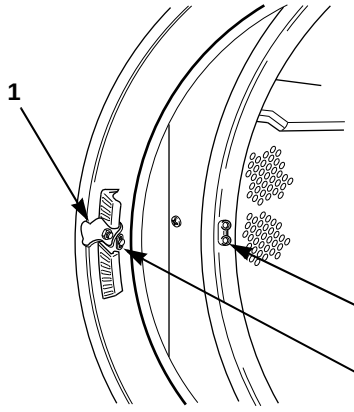

1	Door Latch
2	Door Catch
3	Acorn Nut

Figure 4

29. Loading Door Strike (200 Pound Models)

The loading door strike must be adjusted to have sufficient tension to hold loading door closed against force of load tumbling against it. Proper adjustment is when 8-15 pounds (35.6-66.7 N) pull is required to open door.

If adjustment is required, refer to *Figure 5* and proceed as follows:

To adjust, open door, loosen adjustment screws and position strike for desired magnet engagement. Retighten screws.

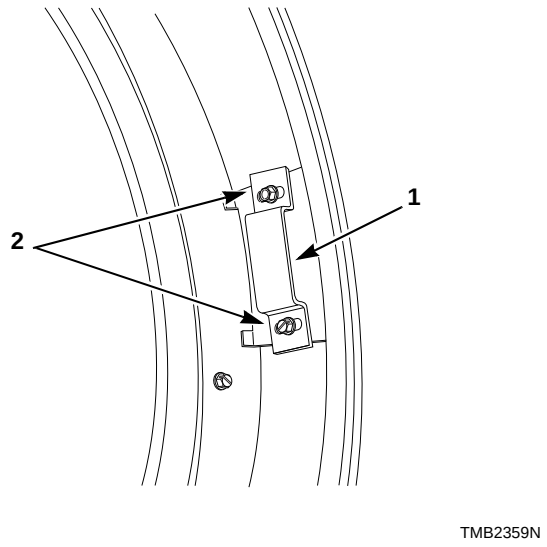

1 Door Strike

2 Adjustment Screws

Figure 5

30. Belt Drive

The drive assemblies consist of motors, belts, eyebolts and a step pulley.

The pulley diameters are sized to produce a cylinder speed of 37-39 RPM for 120 pound models or 29-31 RPM for 170 and 200 pound models.

The step pulley assembly is used for speed reduction as well as a means of adjusting belt tension. The pulley mounting plate is attached to the cabinet. The frame mounting plate has vertically slotted holes allowing up and down movement of the step pulley mounting plate for belt adjustment.

Adjust the belt tension as follows:

1. Disconnect electrical power to the tumble dryer before attempting any adjustments to the drive assembly.
2. Loosen pulley mounting plate bolts.
3. Loosen the upper nut on the final drive eyebolt.
4. Rotate the lower nut of the final drive eyebolt clockwise until proper belt tension is achieved.
5. Rotate upper nut clockwise against the lower nut in order to lock it into place.
6. Tighten pulley mounting plate bolts. Recheck belt tension.
7. If necessary, adjust the drive motor belt tension eyebolt using a similar procedure.
8. Adjust blower belt tension on 120 pound 50 Hertz tumble dryers and all 170 pound tumble dryers using a similar procedure.

NOTE: Proper tensions for new belts are measured with a Belt Tension Gauge:

	Drive Motor		Final Drive		Blower	
	Initial	After Run-in	Initial	After Run-in	Initial	After Run-in
120	60-70	45-55	70-80	55-65	60-70	50-55
170	60-70	45-55	70-80	55-65	75-80	60-65
200	60-70	45-55	70-80	55-65	65-70	55-60

Table 1

Using a Belt Tension Gauge, the motor belt deflection should be 0.31 inch at five pounds pressure, and final drive belt deflection should be 0.25 inch at five pounds pressure.

Belts should not slip or make any noise when starting up under normal load.

31. Cylinder Clearance

The clearance between the cylinder rim and front panel must be adjusted so the cylinder is centered within the front panel opening when the cylinder is fully loaded and is turning. However, the adjustment should be made when the cylinder is empty.

NOTE: If the cylinder is not properly adjusted, the cylinder rim will rub against the front panel.

a. Open loading door.
b. Check the gap between the center of the front panel top flange and the cylinder rim. Proper adjustment is when the gap is 8/32 inch ± 3/32 inch. Refer to *Figure 6*. Perform steps d through i to adjust the cylinder rim/front panel flange clearance.
c. Check the cylinder fore/aft clearance between the inside front of the cylinder and the edge of the front panel flange. Proper adjustment is when the gap is 9/32 inch ± 1/32 inch. Refer to *Figure 6*. Perform steps j through n to adjust the cylinder fore/aft clearance.

Cylinder Rim/Front Panel Flange Clearance Adjustment

a. Support corner drive guard and remove screws holding corner guard to rear of tumbler.
b. Support drive guard cover and remove screws holding guard to rear of tumbler.
c. Loosen rear bearing mounting screws. Refer to *Figure 7*.
d. Loosen the locknuts on rear adjustment screws. Refer to *Figure 7*.
e. Turn the adjusting screws in or out as necessary to obtain proper clearance between cylinder rim and front panel.

NOTE: Turning the adjusting screws clockwise will raise the cylinder and turning them counter-clockwise will lower the cylinder. Turn both screws evenly to adjust top and bottom clearance. Turn one or the other adjusting screw in or out to adjust side clearance.

f. After the cylinder is properly adjusted, tighten the adjusting screw locknuts and the rear bearing mounting screws.
g. Install drive guard cover.

NOTE: If adjusting the trunnion housing fails to correct the clearance, the problem is probably due to a worn trunnion shaft or defective bearings.

Cylinder Fore/Aft Clearance Adjustment

h. Support corner drive guard and remove screws holding corner guard to rear of tumbler.
i. Support drive guard cover and remove screws holding guard to rear of tumbler.
j. Loosen setscrews in the front bearing assembly collar and rear bearing assembly collar. Refer to *Figure 7*.
k. Move cylinder assembly in or out as necessary to obtain proper clearance between the cylinder and the front panel.
l. After the cylinder is properly adjusted, tighten setscrews in the front and rear bearing assembly collars.
m. Install drive guard cover.

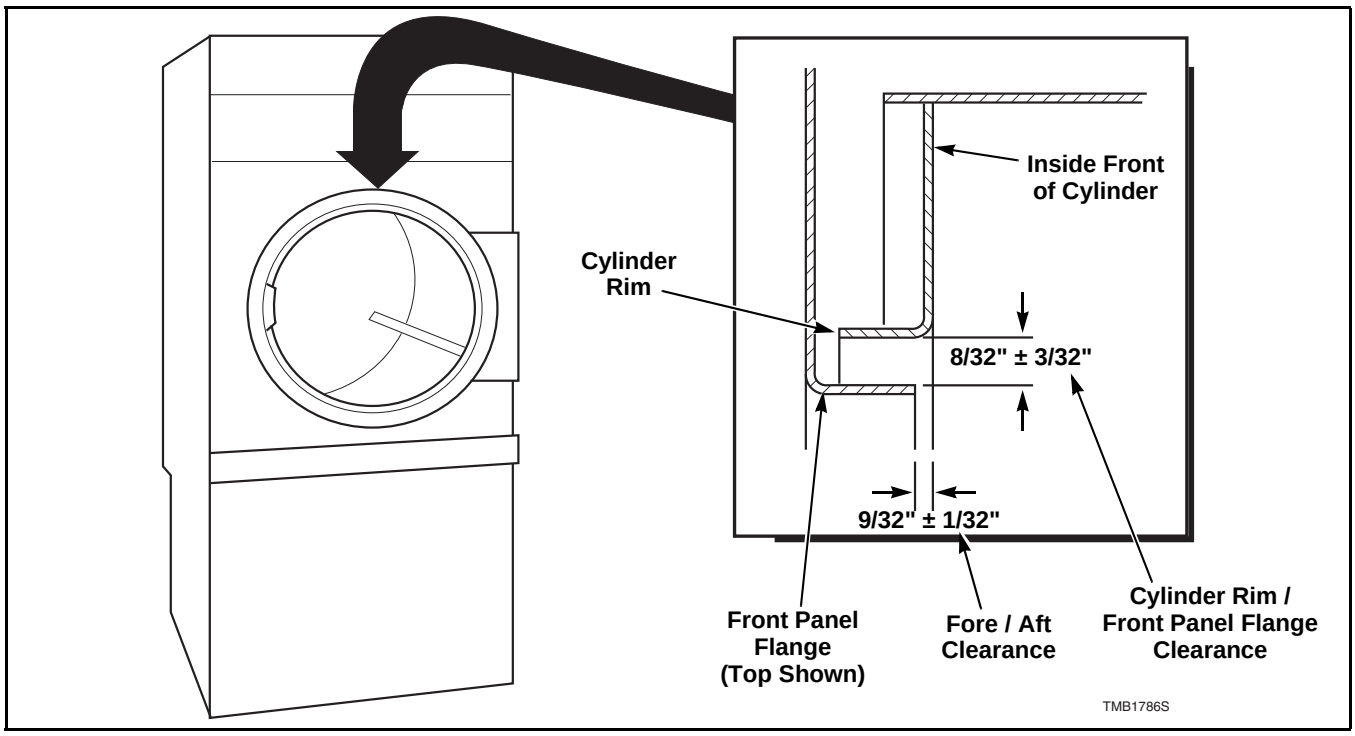

Figure 6

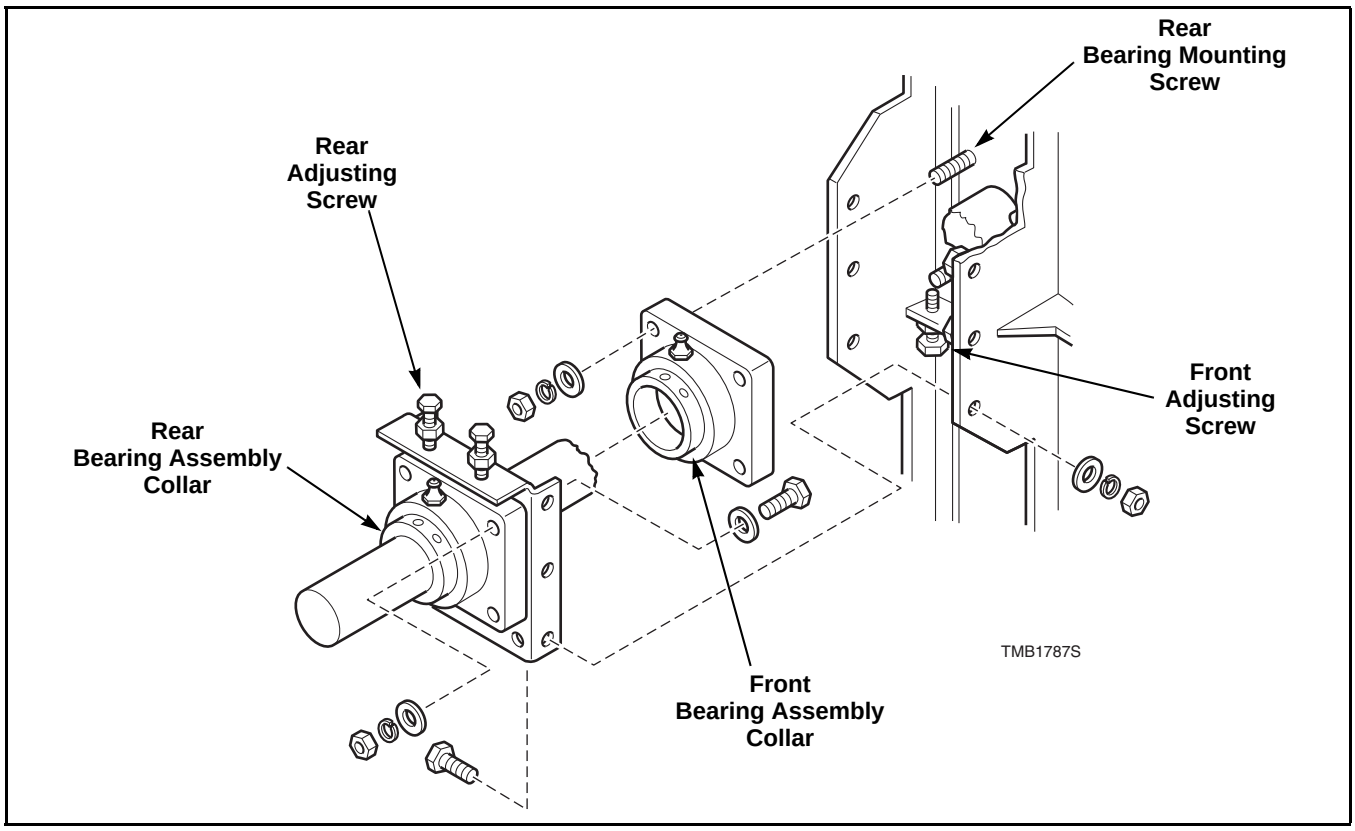

Figure 7

32. Drive Belt Tension

Refer to *Figure 7*.

NOTE: If cylinder belts will be adjusted, service them before drive belt.

120 Pound Models:

NOTE: Belt tension from step pulley to cylinder shaft pulley can be measured to ensure proper installation in one of the following ways:

- **Belt Tension Gauge initial reading 70-80 pounds.**
- **Force to deflect belt .38 inch at midspan with initial tensioning 6.5 pounds.**
- **Belt Tension Gauge reading after run 55-65 pounds.**

170 and 200 Pound Models:

NOTE: Belt tension from cylinder drive motor pulley to step pulley can be measured to ensure proper installation in one of the following ways:

- **Belt Tension Gauge initial reading 60-70 pounds.**
- **Force to deflect belt .38 inch at midspan with initial tensioning 6.0 pounds.**
- **Belt Tension Gauge reading after run 45-55 pounds.**
  a. Support corner drive guard and remove screws holding corner guard to rear of tumbler.
  b. Support drive guard cover and remove screws holding guard to rear of tumbler.
  c. Reinstall drive guard.
  d. Loosen the two motor bracket pivot screws. Refer to *Figure 7*.
  e. Turn the adjusting nuts clockwise until proper tension is reached. Refer to *Figure 7*.
  f. Retighten all nuts and screws.

33. Fan Belt Tension

Refer to *Figure 8*.

120 Pound Models:

NOTE: Belt tension from fan motor pulley to fan shaft pulley can be measured to ensure proper installation in one of the following ways:

- **Belt Tension Gauge initial reading 60-70 pounds.**
- **Force to deflect belt .38 inch at midspan with initial tensioning 7.0 pounds.**
- **Belt Tension Gauge reading after run 50-55 pounds.**

170 and 200 Pound Models:

NOTE: Belt tension from fan motor pulley to fan shaft pulley can be measured to ensure proper installation in one of the following ways:

- **Belt Tension Gauge initial reading 75-80 pounds.**
- **Force to deflect belt .38 inch at midspan with initial tensioning 5.0 pounds.**
- **Belt Tension Gauge reading after run 60-65 pounds.**

Support corner drive guard and remove screws holding corner guard to rear of tumbler**.**

a. Support drive guard cover and remove screws holding guard to rear of tumbler.
b. Loosen the two mounting bracket attaching screws.
c. Raise or lower eye bolt until proper tension is reached.
d. Retighten all nuts and screws.

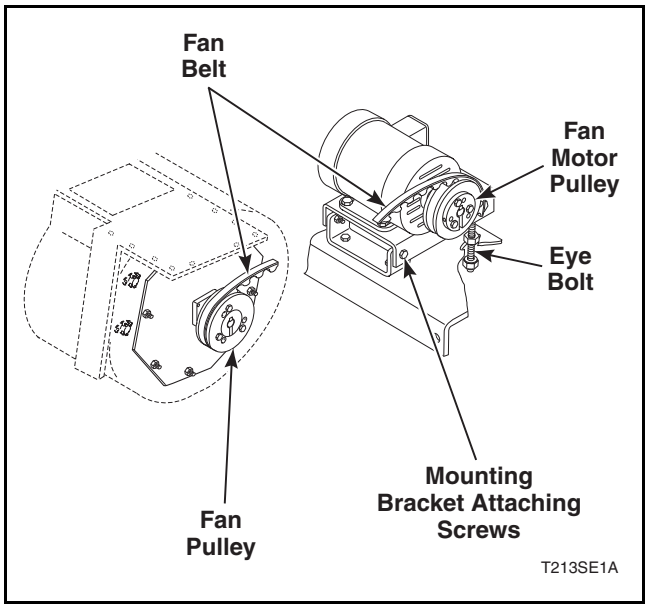

Figure 8

Section 6
Hybrid Timer Control Troubleshooting

WARNING

To reduce the risk of electric shock, fire, explosion, serious injury or death:
- **Disconnect electric power to the tumbler before servicing.**
- **Close gas shut-off valve to gas tumbler before servicing.**
- **Close steam valve to steam tumbler before servicing.**
- **Never start the tumbler with any guards/panels removed.**
- **Whenever ground wires are removed during servicing, these ground wires must be reconnected to ensure that the tumbler is properly grounded.**

W002

34. Control Has No Display

Control Has No Display

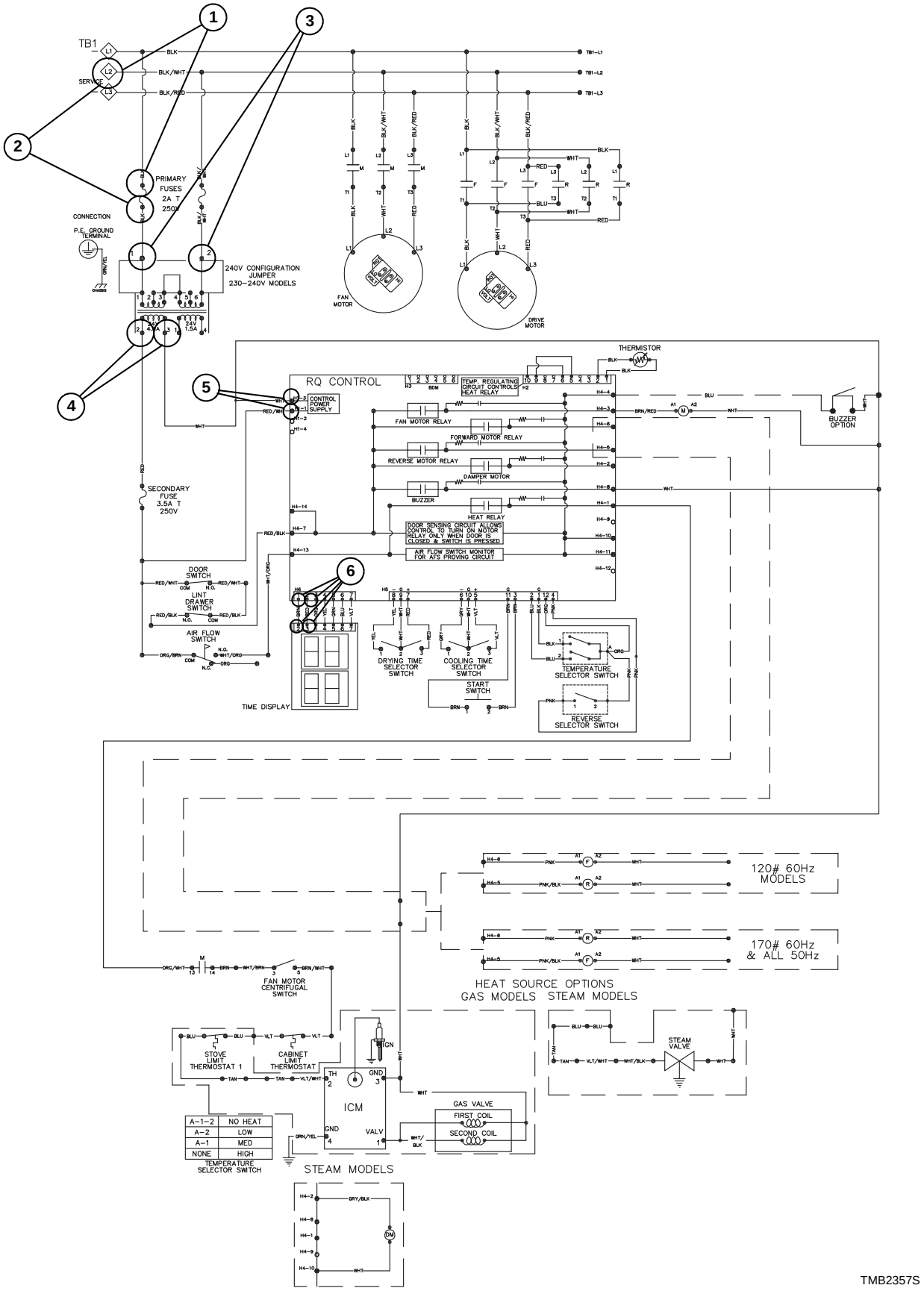

35. Display Flashes “dr” With Door Closed

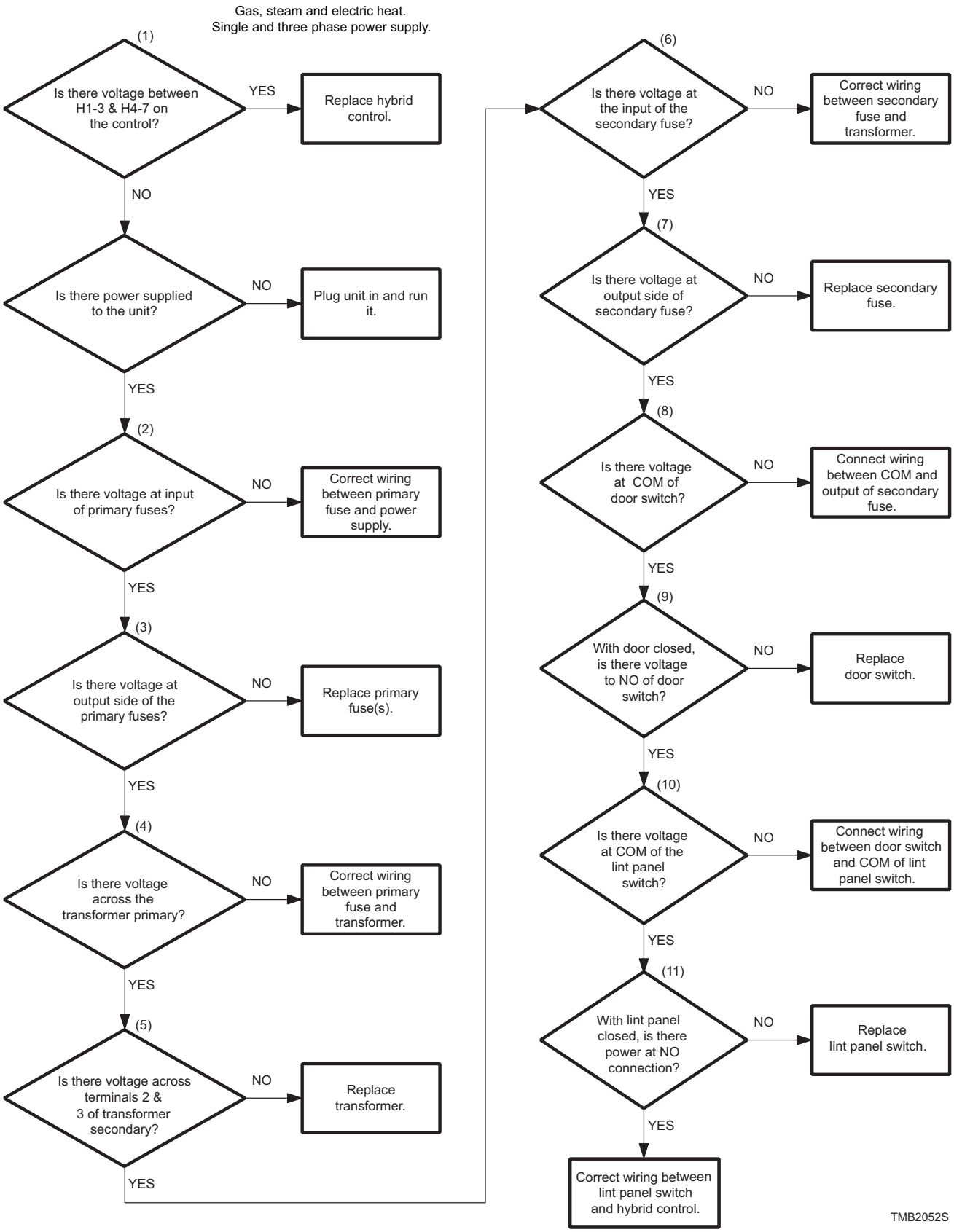

Display Flashes “dr” With Door Closed

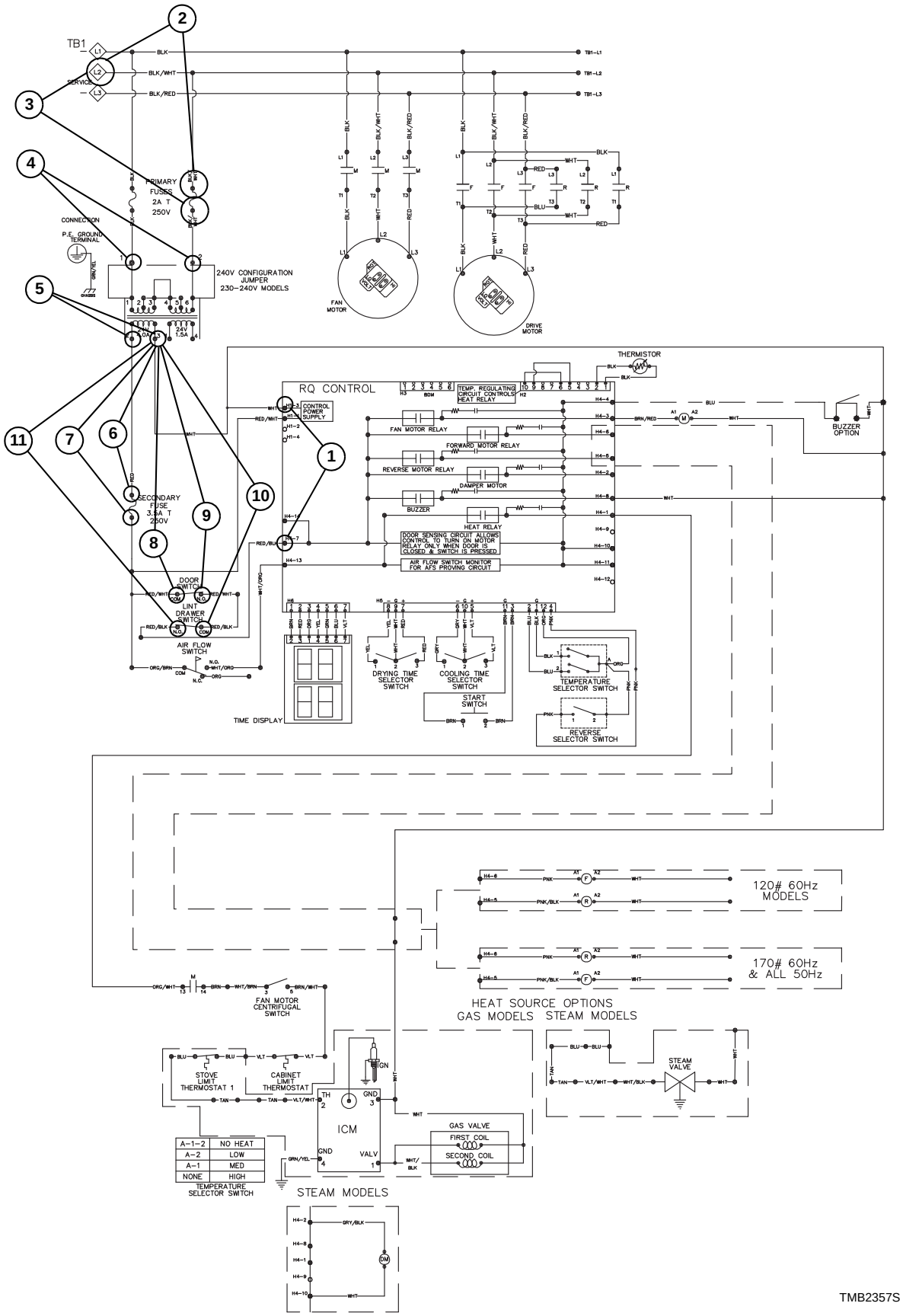

36. Motor Will Not Start/Run

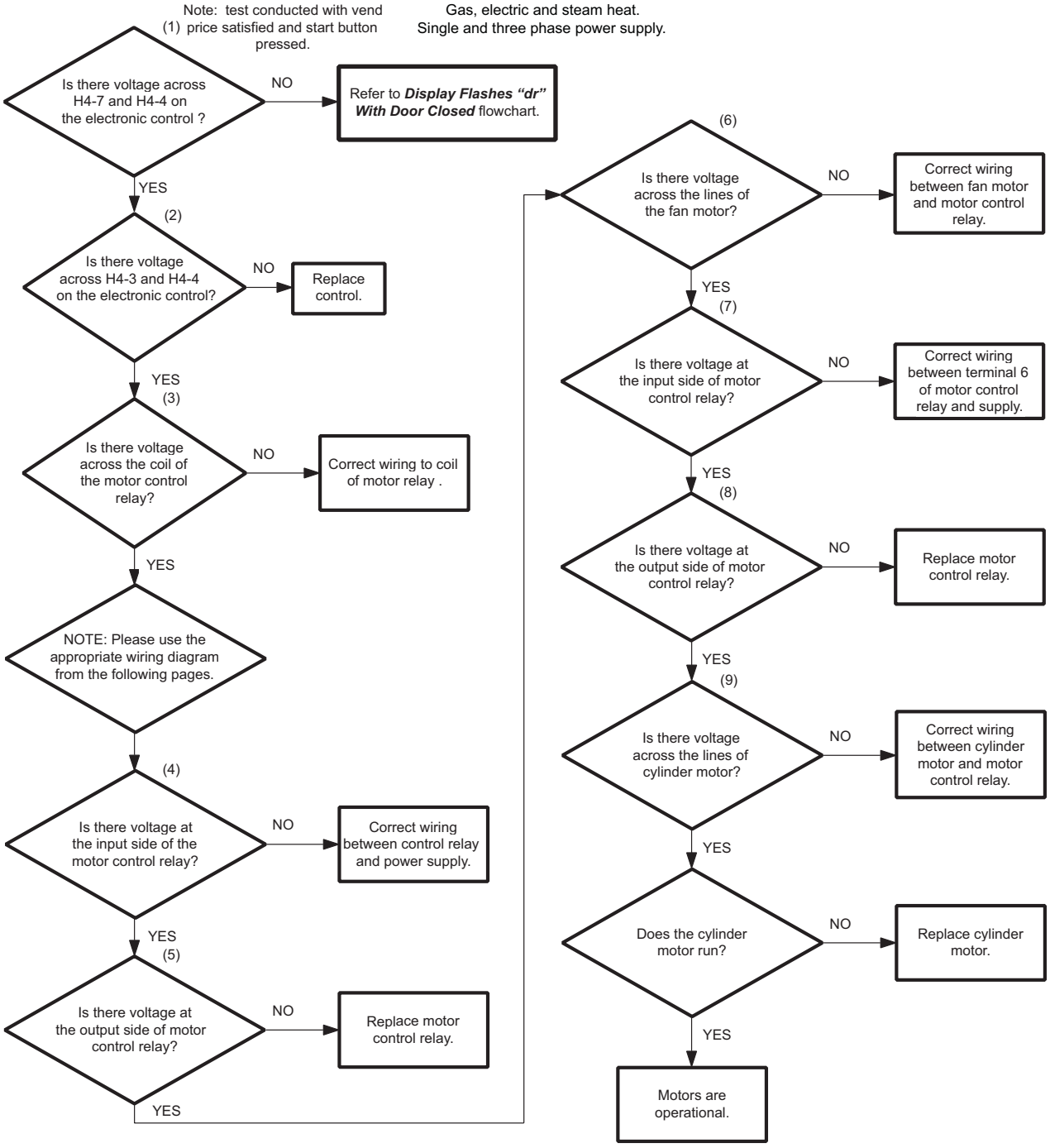

Motor Will Not Start/Run

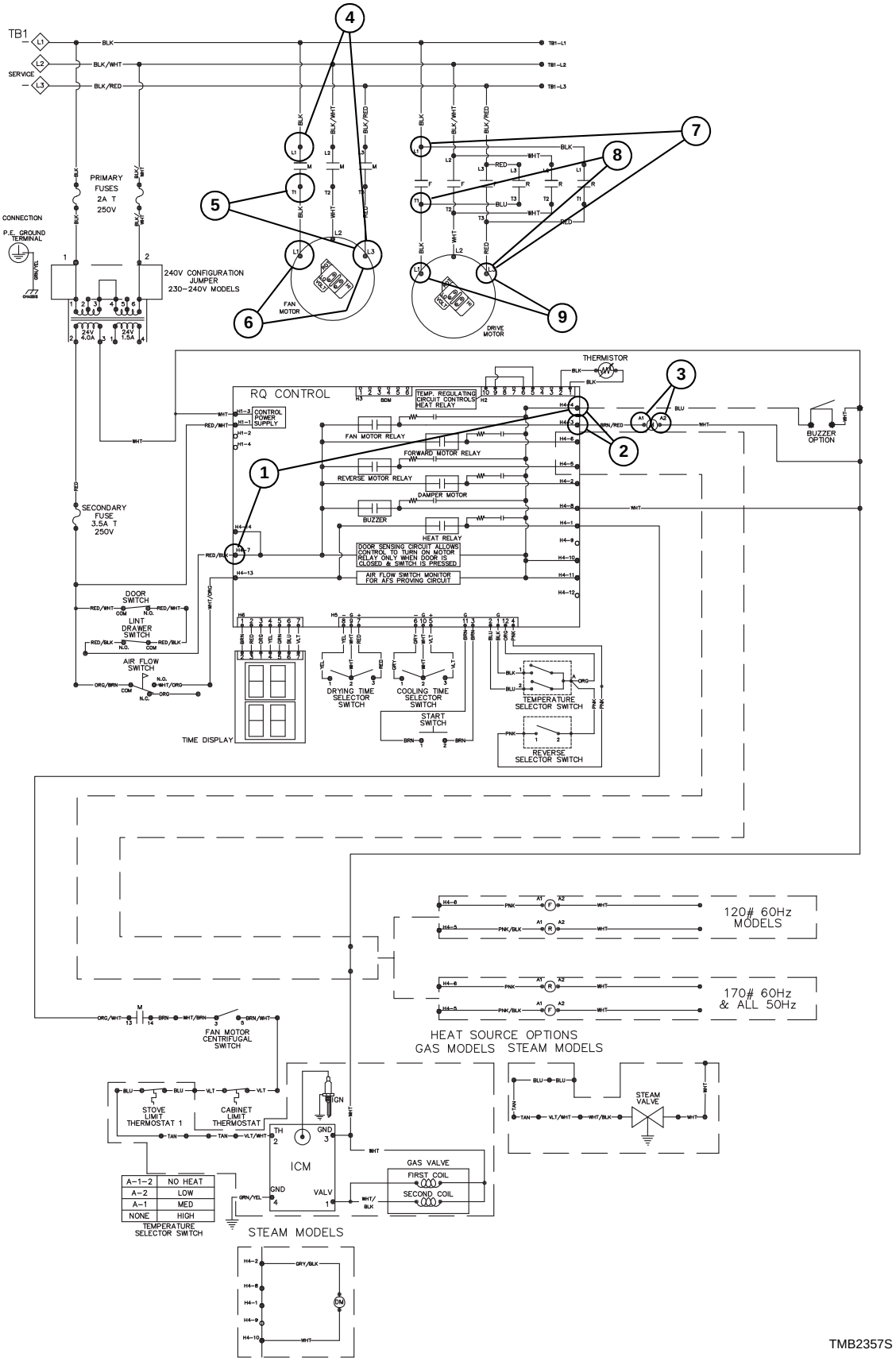

37. Unit Will Not Heat – Gas

Note: Tests are conducted with unit running and calling for heat.

All voltage checks are referenced to transformer neutral.

37. Unit Will Not Heat – Gas (continued)

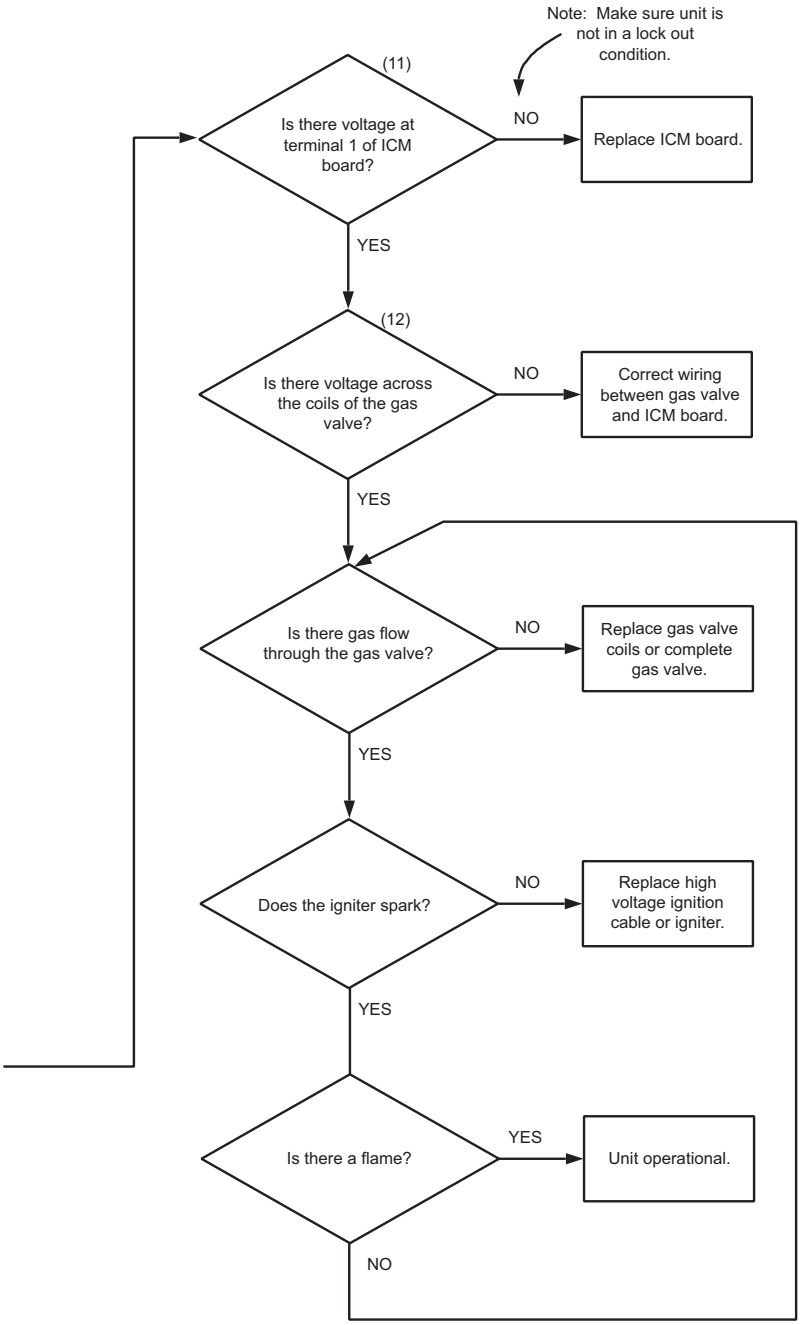

TMB2358S-b

Please see following page for wiring diagram information.

Unit Will Not Heat – Gas

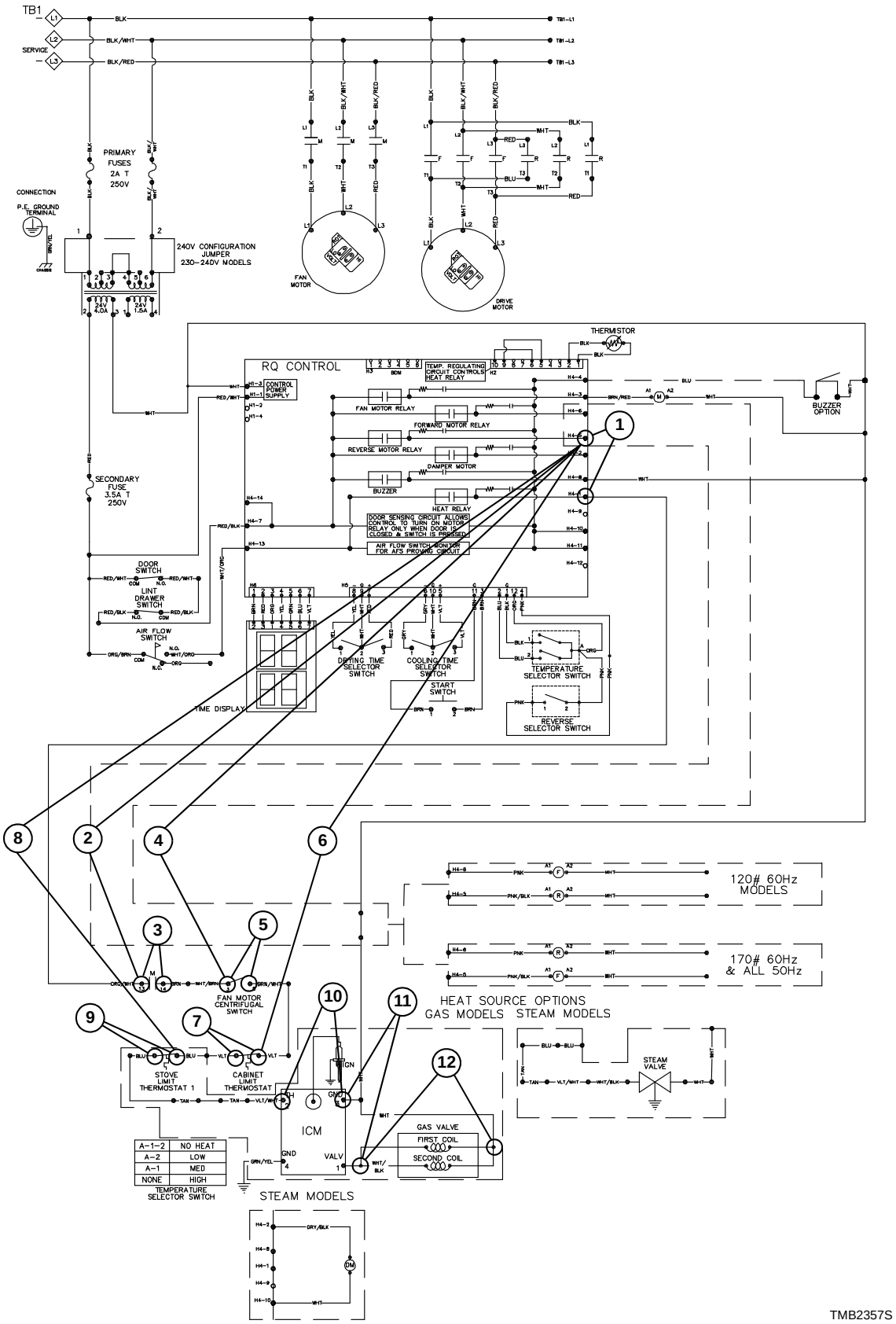

WARNING

To reduce the risk of electric shock, fire, explosion, serious injury or death:
- **Disconnect electric power to the tumbler before servicing.**
- **Close gas shut-off valve to gas tumbler before servicing.**
- **Close steam valve to steam tumbler before servicing.**
- **Never start the tumbler with any guards/panels removed.**
- **Whenever ground wires are removed during servicing, these ground wires must be reconnected to ensure that the tumbler is properly grounded.**

W002

38. Error Codes

Display	Definition	Corrective Action
OP	Open thermistor error.	• Check thermistor. Replace if inoperative. • Check wiring between control and thermistor. Refer to wiring diagram for proper wiring. • Check control. Replace if inoperative.
SH	Shorted thermistor error.	• Check thermistor. Replace if inoperative. • Check wiring between control and thermistor. Refer to wiring diagram for proper wiring. • Check control. Replace if inoperative.
AF-1	Airflow switch closed when cycle started.	• Check airflow switch. Replace if inoperative.
AF-2	Airflow switch failed to closed after cycle started.	• Check airflow switch. Replace if inoperative.
AF (flashing)	Airflow switch opened/closed 5 or more times in a running cycle.	• Check airflow switch. Replace if inoperative.

Section 7
On Premise Micro Control (RM) Troubleshooting

WARNING

To reduce the risk of electric shock, fire, explosion, serious injury or death:
- **Disconnect electric power to the tumbler before servicing.**
- **Close gas shut-off valve to gas tumbler before servicing.**
- **Close steam valve to steam tumbler before servicing.**
- **Never start the tumbler with any guards/panels removed.**
- **Whenever ground wires are removed during servicing, these ground wires must be reconnected to ensure that the tumbler is properly grounded.**

W002

39. Control Has No Display

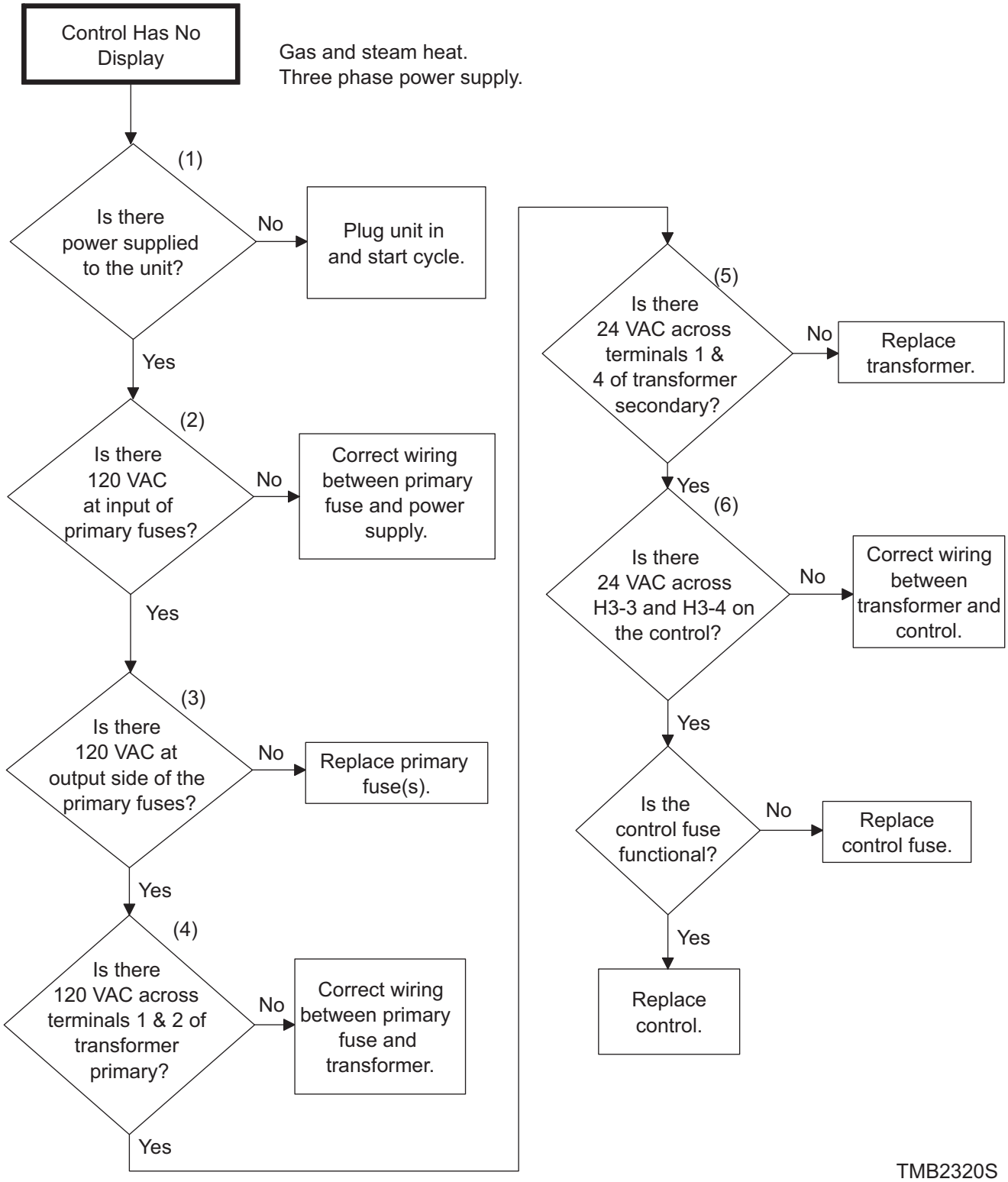

Control Has No Display

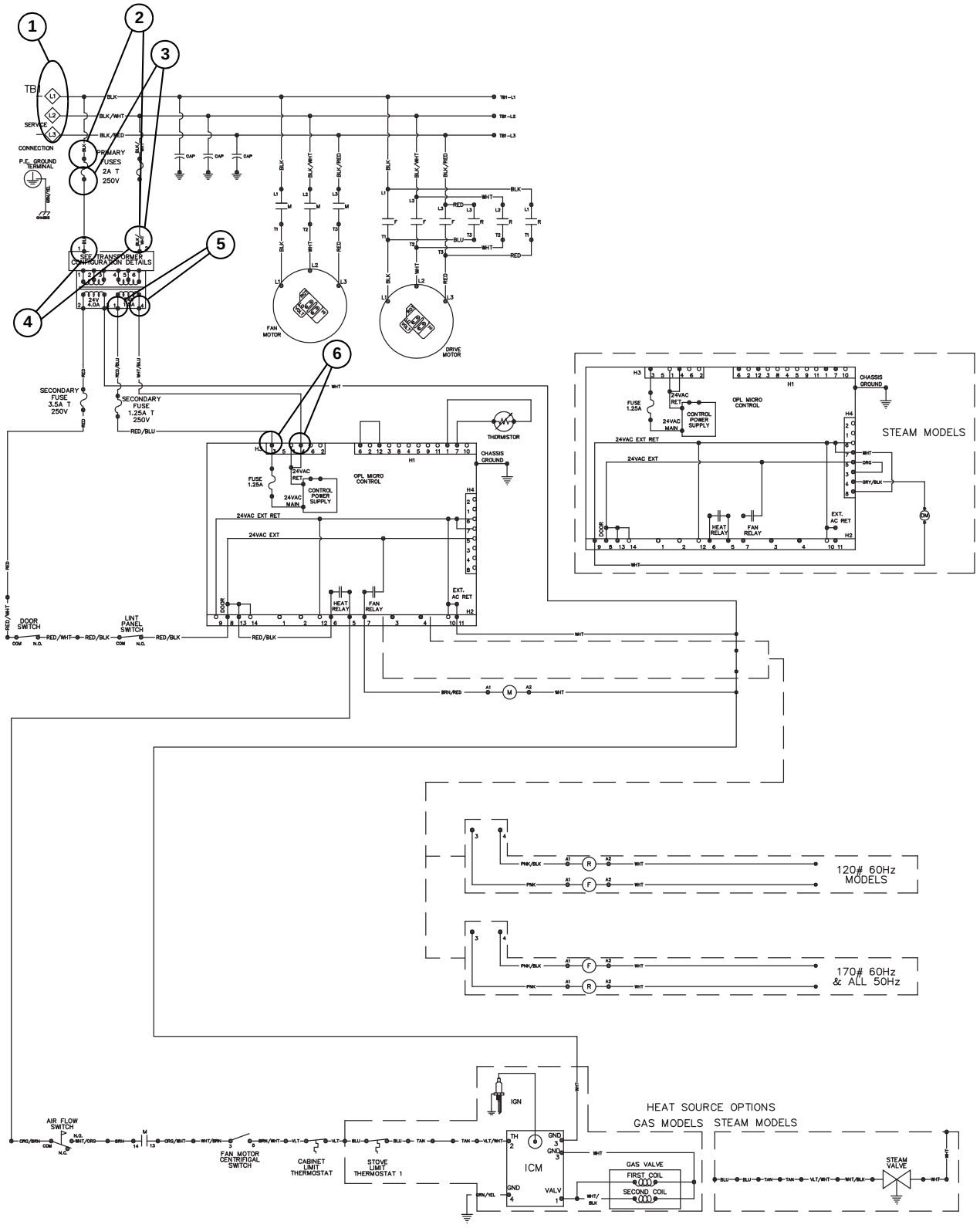

40. Door Open Indicator

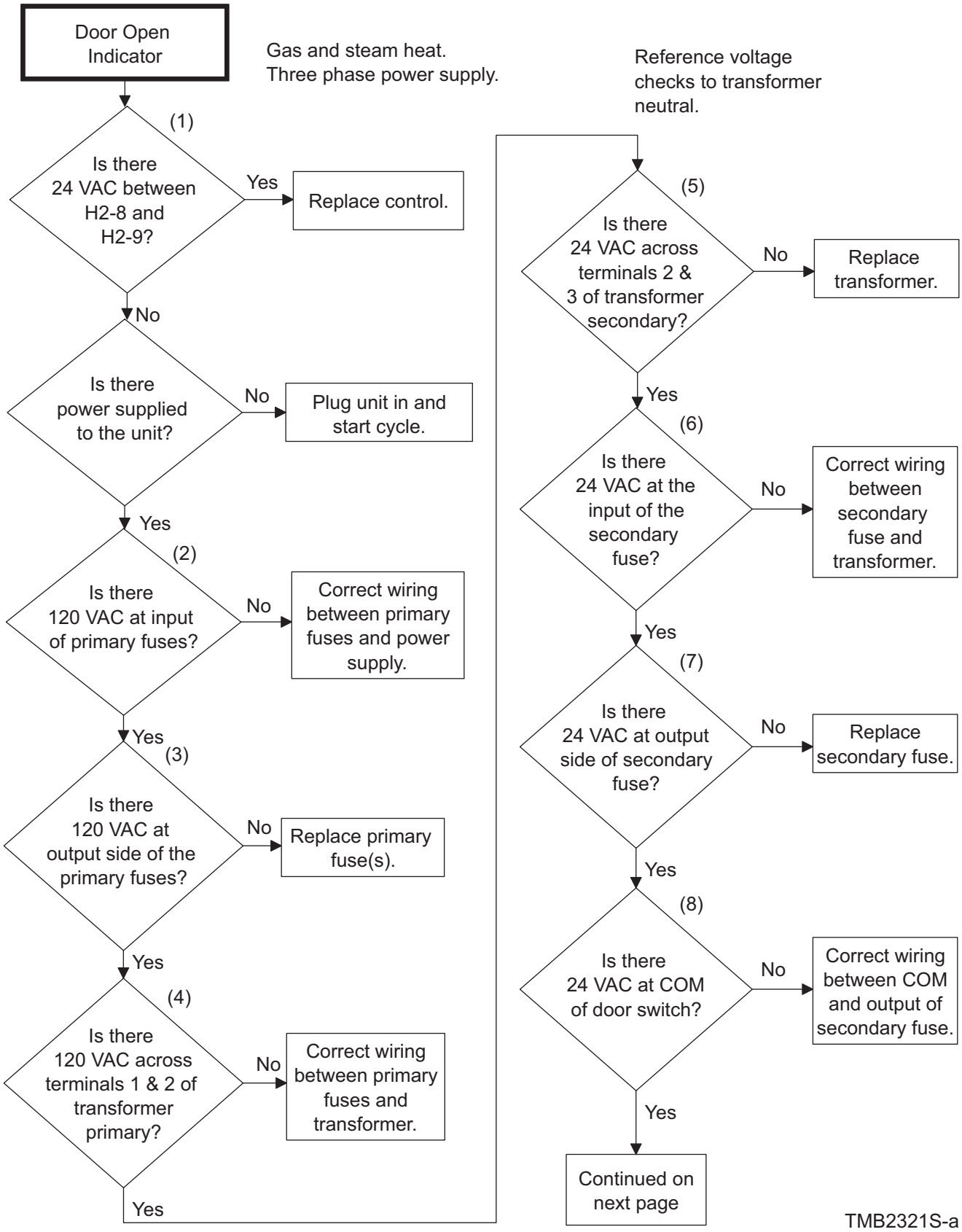

40. Door Open Indicator (continued)

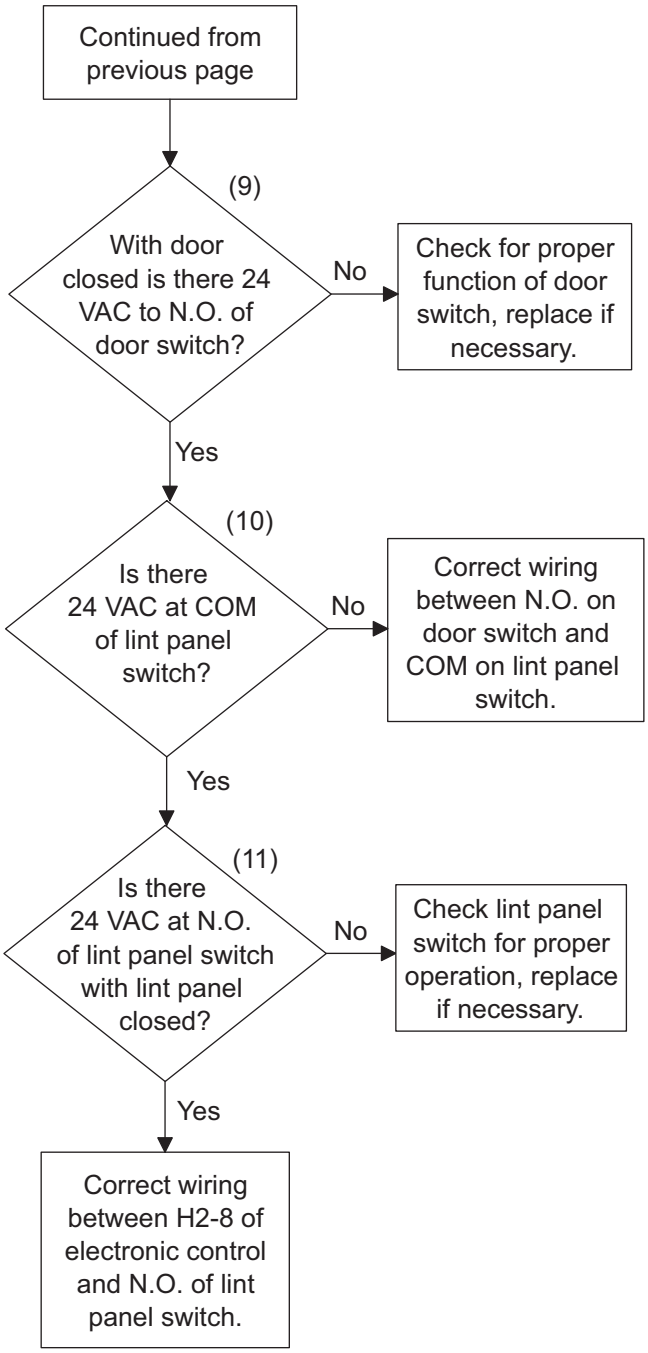

TMB2321S-b

Please see following page for wiring diagram information.

Door Open Indicator

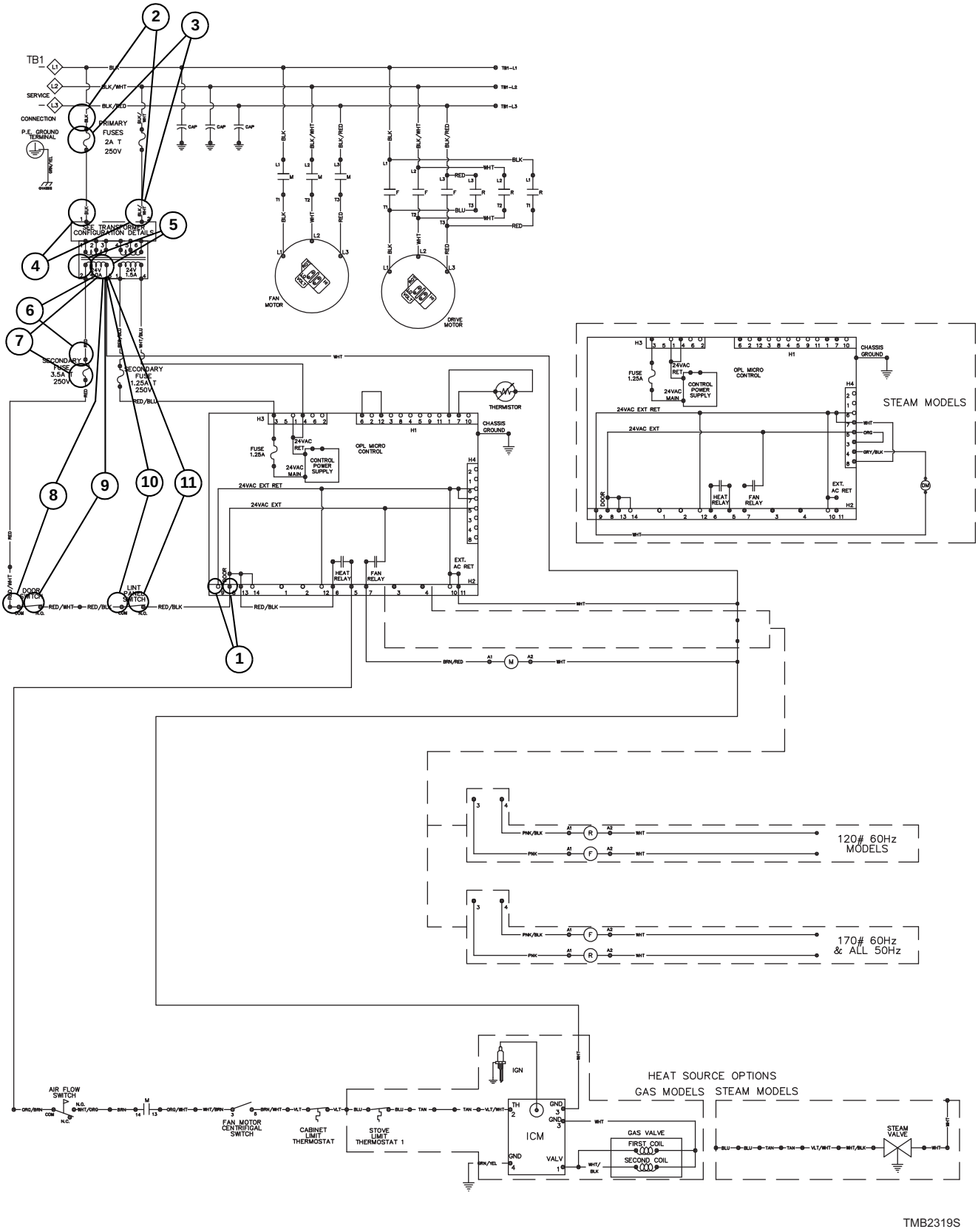

41. Motor Will Not Start/Run

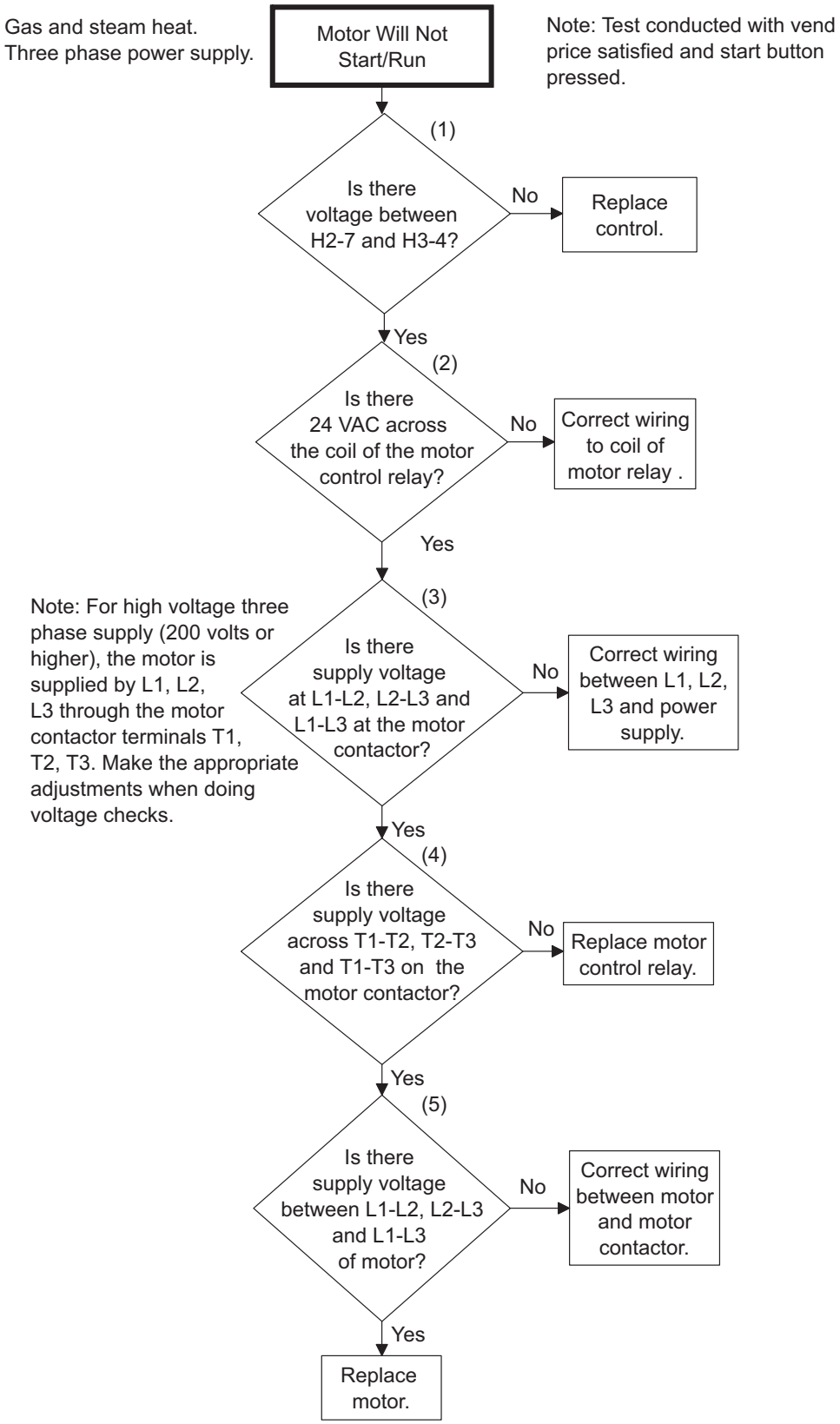

Motor Will Not Start/Run

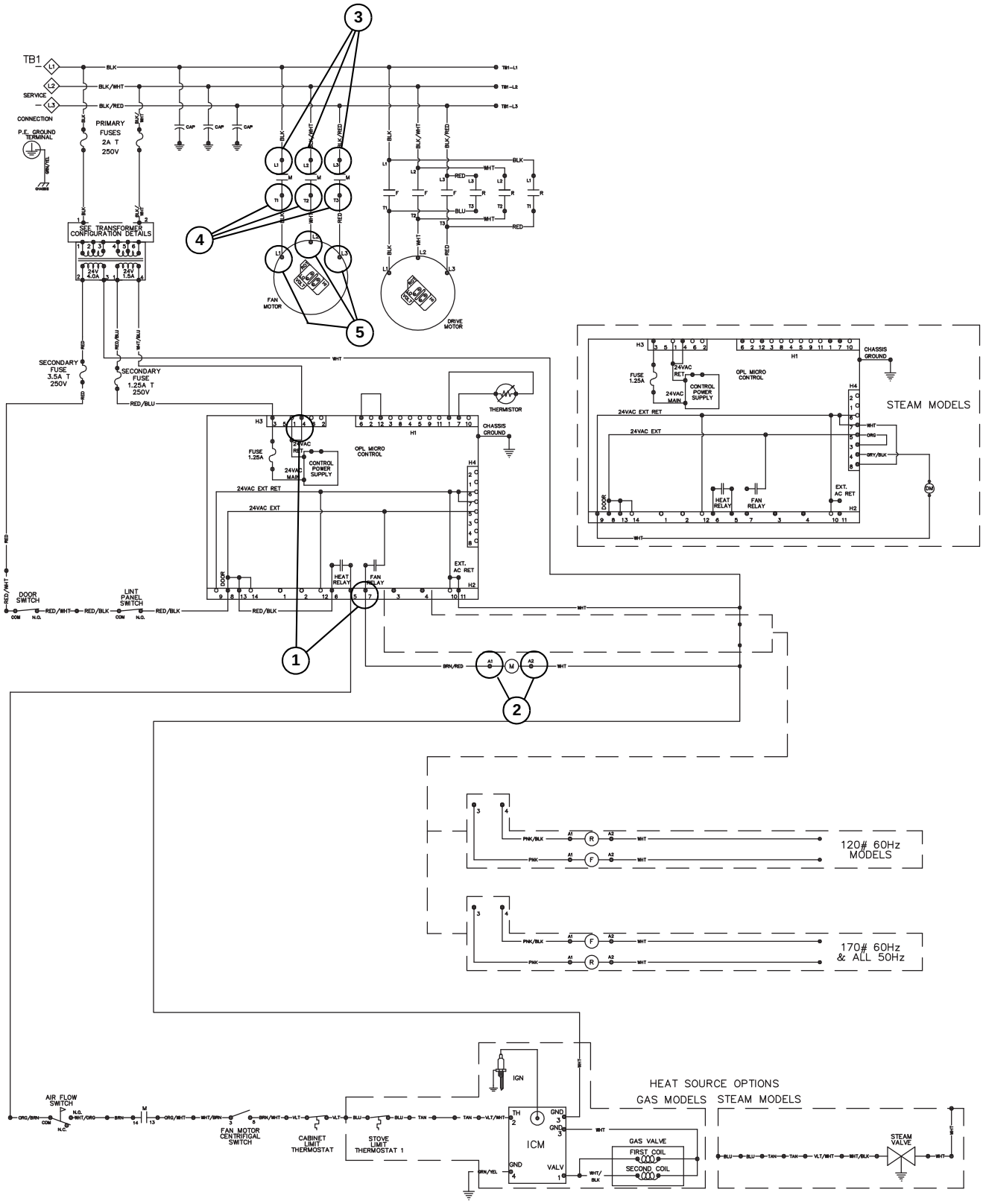

42. Unit Will Not Heat – Gas/Steam

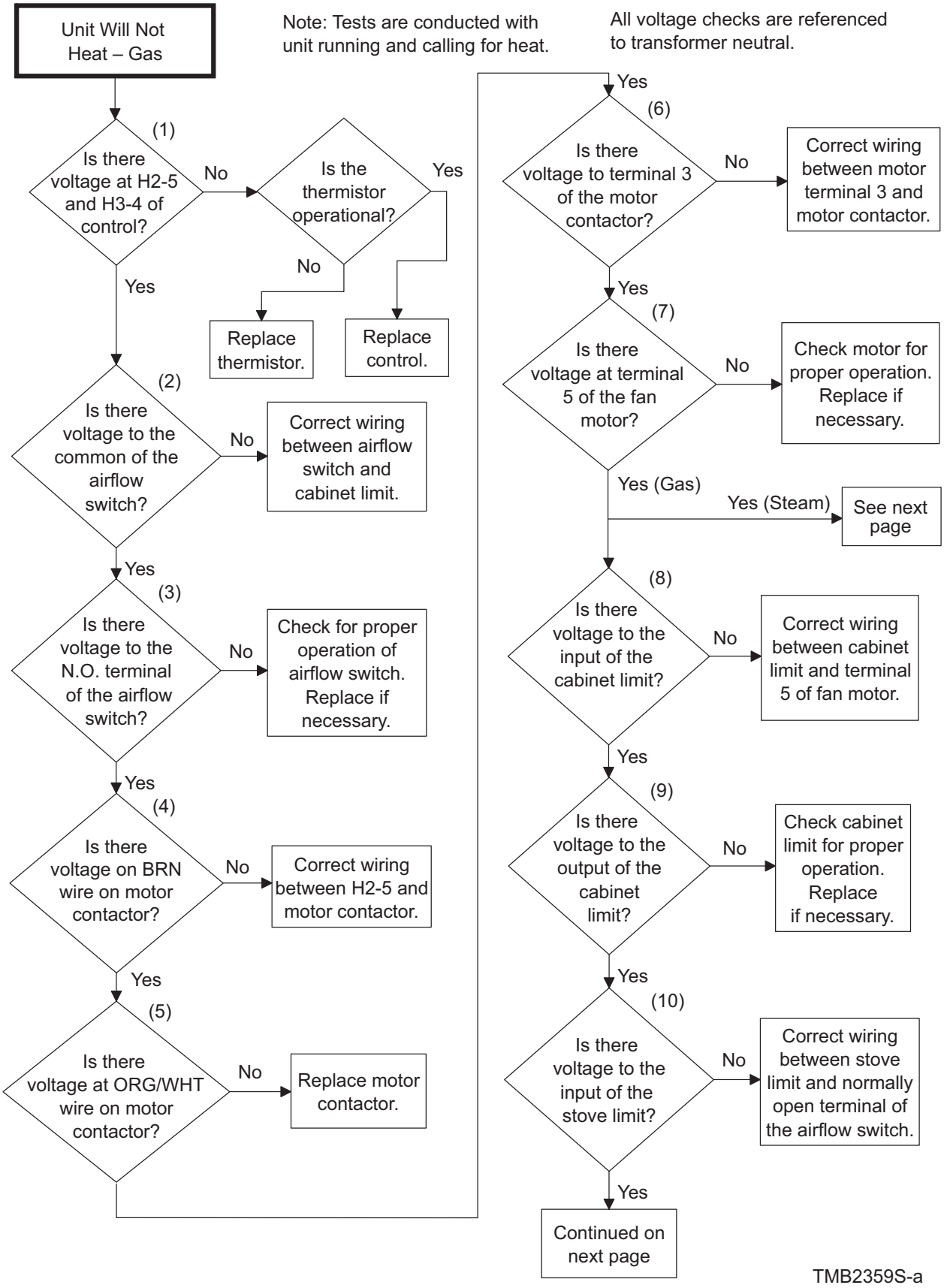

42. Unit Will Not Heat – Gas/Steam (continued)

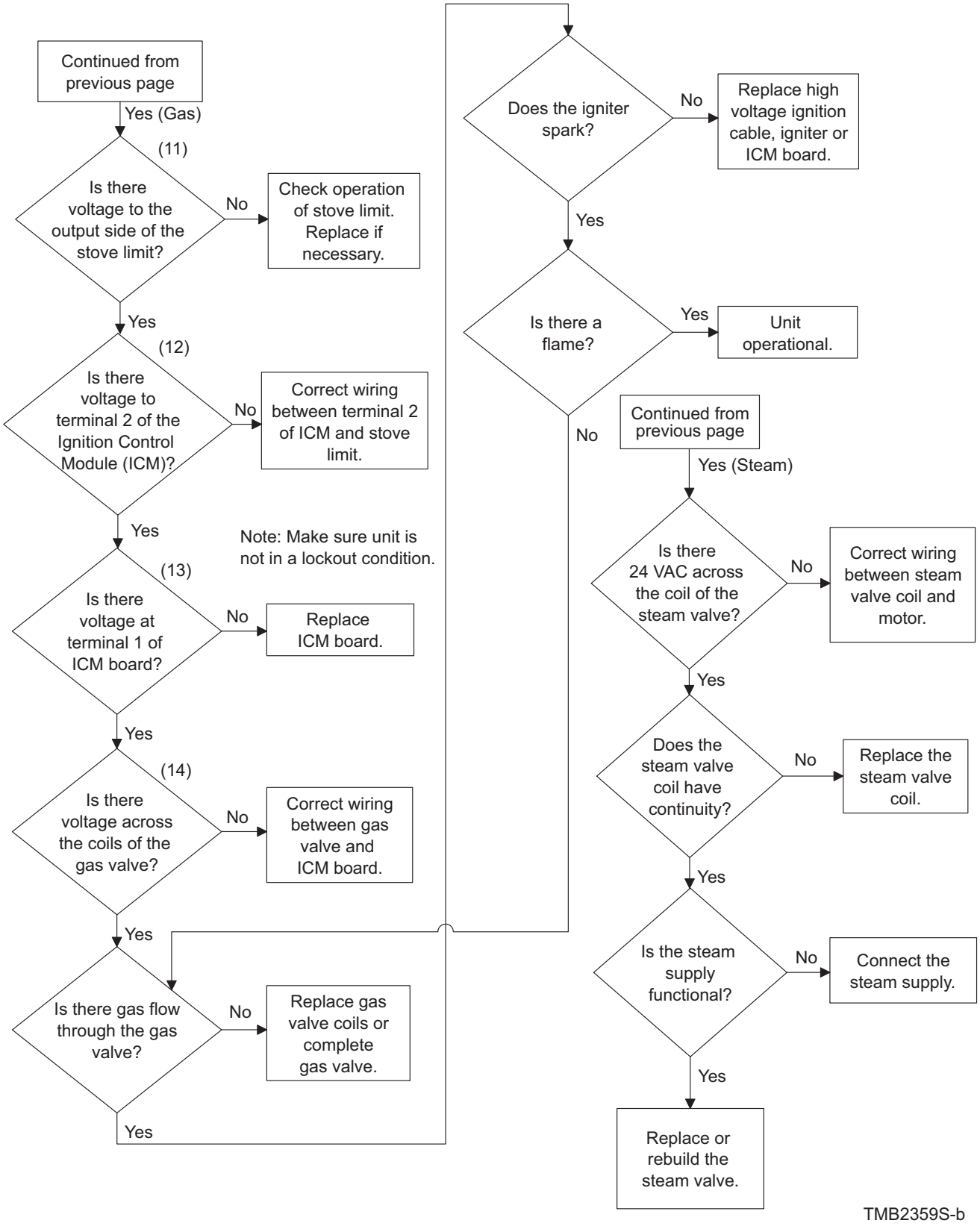

Please see following page for wiring diagram information.

Unit Will Not Heat – Gas/Steam

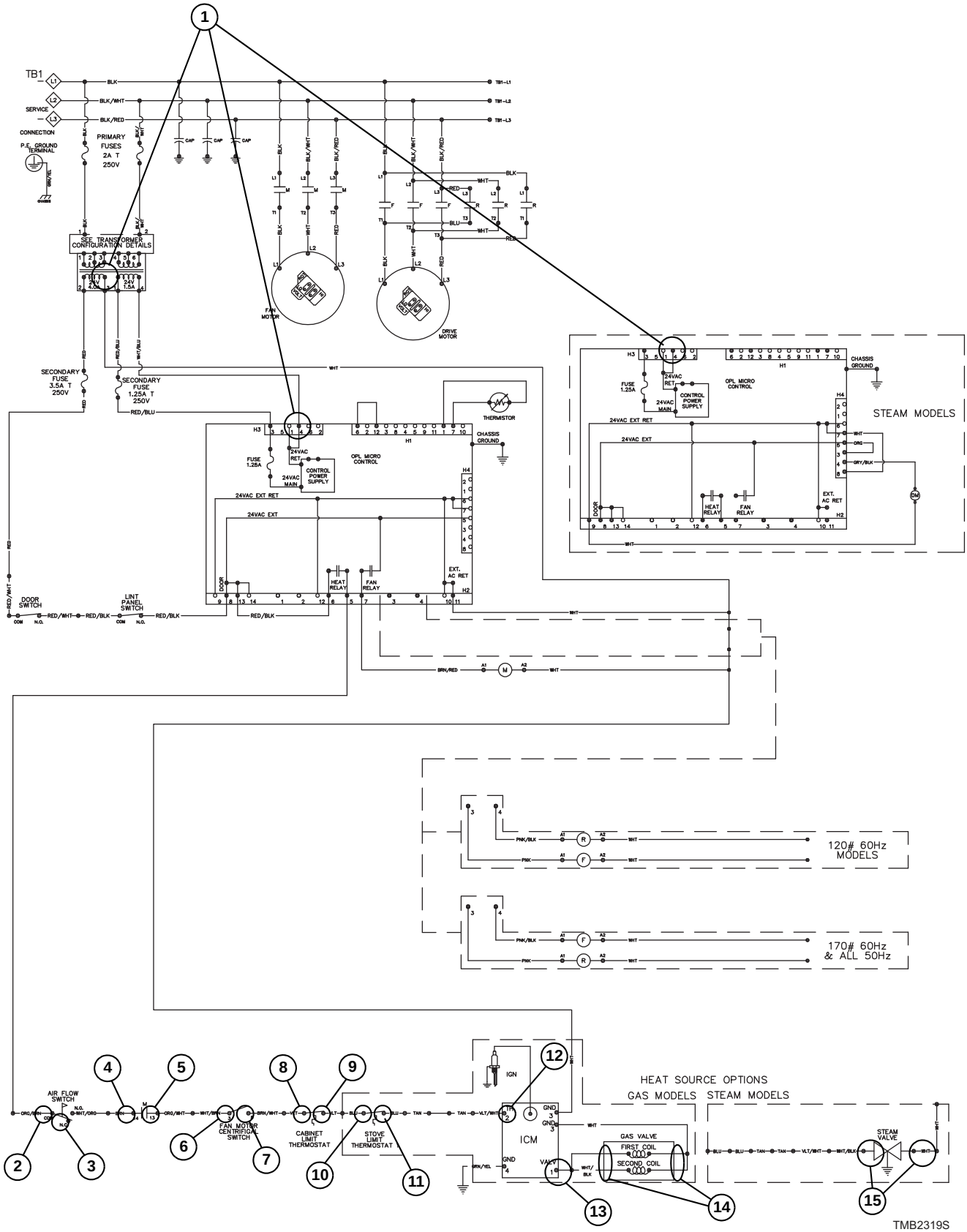

WARNING

To reduce the risk of electric shock, fire, explosion, serious injury or death:
- **Disconnect electric power to the dryer(s) before servicing.**
- **Close gas shut-off valve to gas dryer(s) before servicing.**
- **Never start the dryer(s) with any guards/panels removed.**
- **Whenever ground wires are removed during servicing, these ground wires must be reconnected to ensure that the dryer is properly grounded.**

W001R1

43. Error Codes

OP - Indicates physical “open” in the thermistor circuit. Possible causes are: 1) thermistor, 2) wiring between control and thermistor, 3) control.
SH - Indicates a “short” in the thermistor circuit. Possible causes are: 1) shorted thermistor, 2) a short in the wiring between control and thermistor, 3) control.

Display	Definition	Corrective Action
OP	Indicates an open circuit in the thermistor.	• Check thermistor. Replace if inoperative. • Check wiring between control and thermistor. Refer to wiring diagram for proper wiring. • Check control. Replace if inoperative.
SH	Indicates a short circuit in the thermistor.	• Check thermistor. Replace if inoperative. • Check wiring between control and thermistor. Refer to wiring diagram for proper wiring. • Check control. Replace if inoperative.

Section 8
LED OPL and UniLinc Troubleshooting

Models with RE and RU Control Suffixes

WARNING

To reduce the risk of electric shock, fire, explosion, serious injury or death:
- **Disconnect electric power to the tumble dryer before servicing.**
- **Close gas shut-off valve to gas tumble dryer before servicing.**
- **Close steam valve to steam tumble dryer before servicing.**
- **Never start the tumble dryer with any guards/panels removed.**
- **Whenever ground wires are removed during servicing, these ground wires must be reconnected to ensure that the tumble dryer is properly grounded.**

W002R1

NOTE: The UniLinc's Inputs and Outputs Menu can be used to check the current status of inputs as well as control the state of any output.

Both UniLinc and LED OPL Controls contain a comprehensive test cycle that can be used to verify machine configuration and functionality.

Diagnostic LEDs

Before troubleshooting the following errors, verify that the front-end control is trying to turn the output on by checking for the corresponding red diagnostic LED on the Input/Output (I/O) Board. Diagnostic LEDs can be found for the following outputs:

- Forward Motor
- Reverse Motor
- Fan Motor
- Damper Motor
- External Alarm
- Heater

In addition, the I/O Board has a LED labeled "+5VDC" that indicates whether the I/O Board is powered. When lit, the I/O Board and front-end control should both be powered. If the LED does not light and both are powered, verify that the loading door and lint door are closed, and, if checking heater-related errors, that the heat interlock chain is closed (AirFlow Switch, Fan Contactor, Fan Centrifugal Switch, Cabinet Limit and Stove Limit). If the LED still does not light, check the connection between the front-end control and the I/O Board. If they are connected properly and voltage is present at the pin corresponding to the error with the ground pin on the same connector, the I/O Board must be replaced. If voltage is not present, the front-end control must be replaced.

44. No Fan Motor Rotation

NOTE: All mechanical checks should be performed prior to starting the electrical checks. Ensure the belt(s), basket, idler and pulleys are rotating freely.

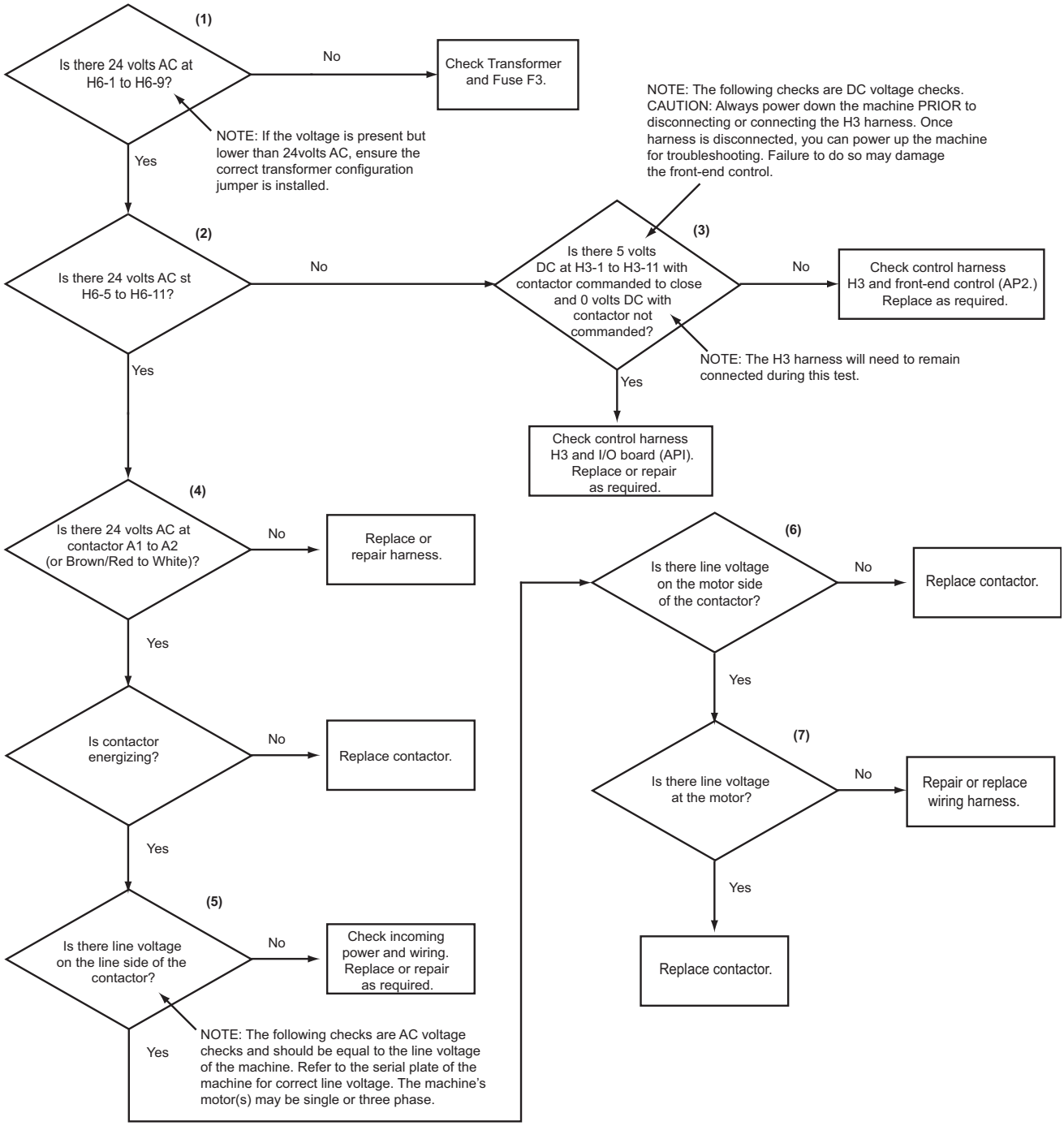

No Fan Motor Rotation (Drawing 1 of 2)

NOTE: The door and lint door must be closed for voltage to be present at the fan.

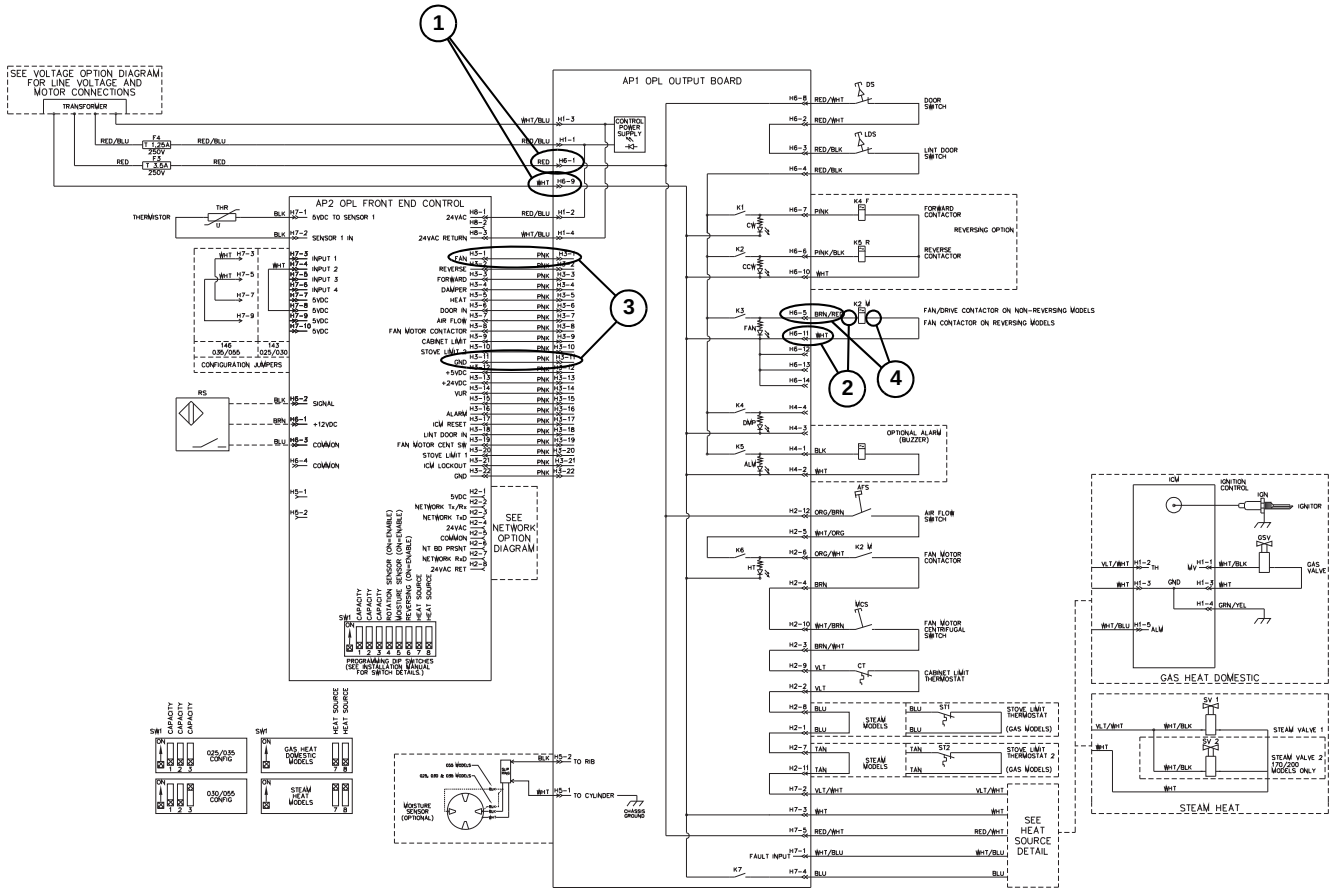

TMB2383S

No Fan Motor Rotation (Drawing 2 of 2)

NOTE: The door and lint door must be closed for voltage to be present at the fan.

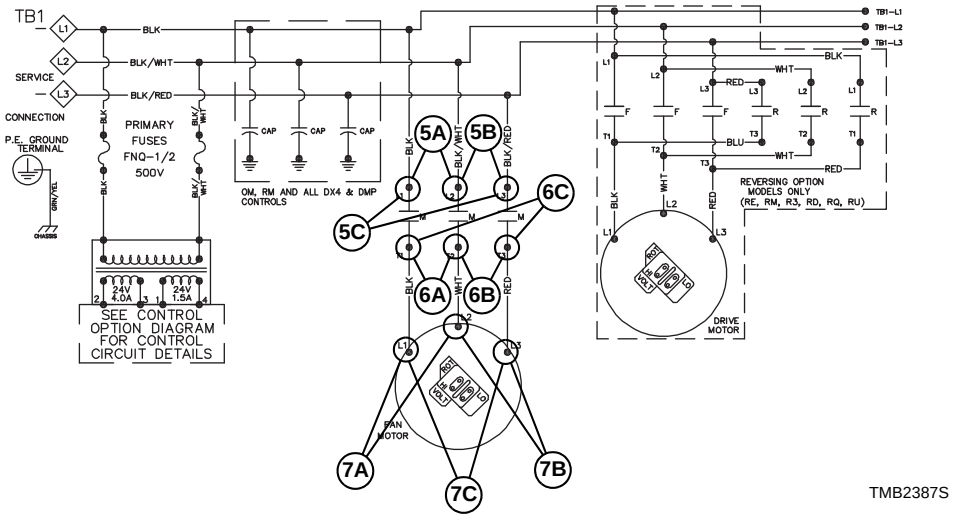

45. No Drive Motor Rotation

NOTE: This is for machines with the reversing option only. Each step has a F (Forward) or R (Reverse) representing the direction of rotation. Ensure the cycle is programmed for either reversing or non-reversing.

NOTE: All mechanical checks should be performed prior to starting the electrical checks. Ensure the belt(s), basket, idler and pulleys are rotating freely.

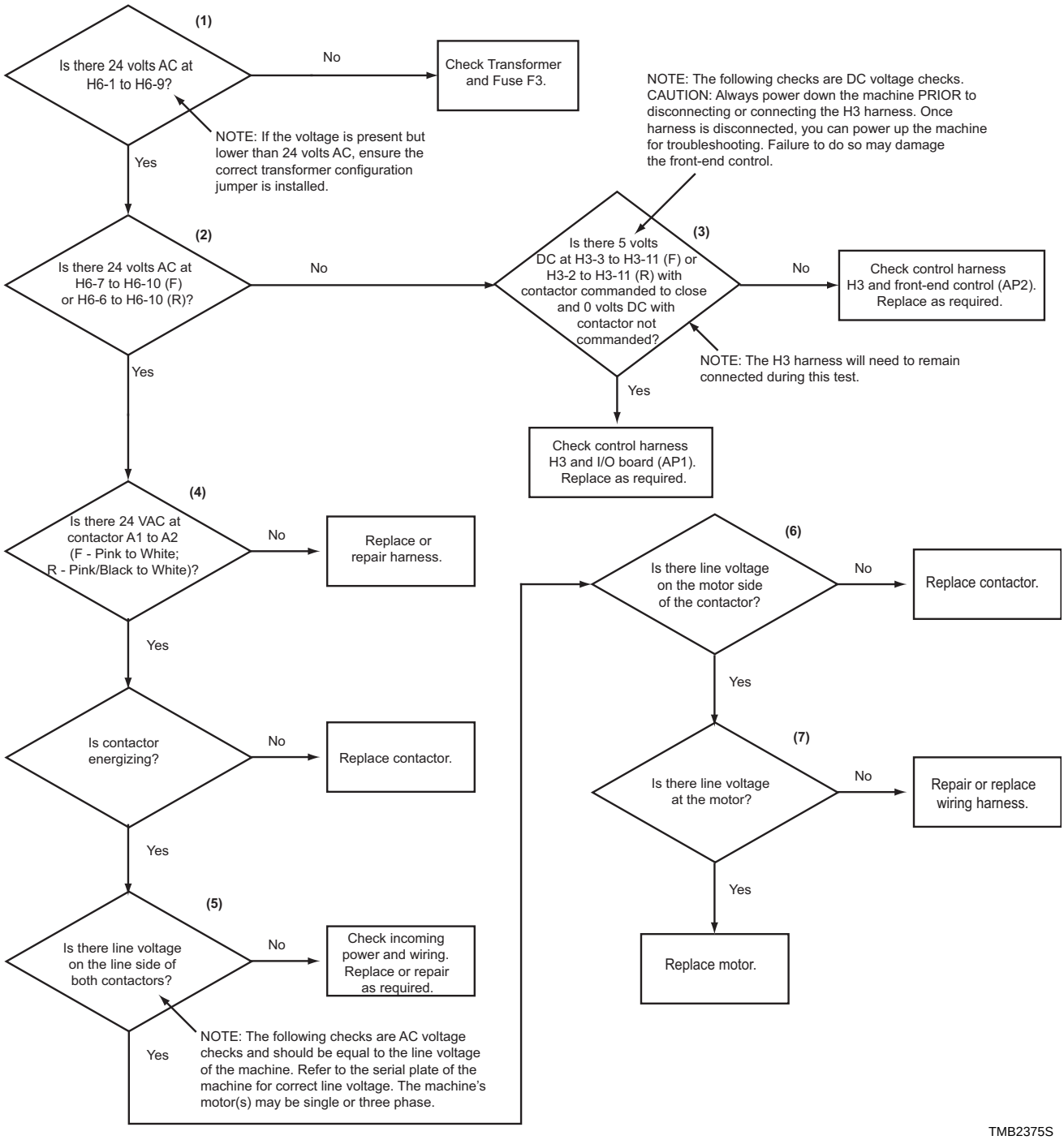

No Drive Motor Rotation (Drawing 1 of 2)

NOTE: The door and lint door must be closed for voltage to be present at the forward and reverse outputs.

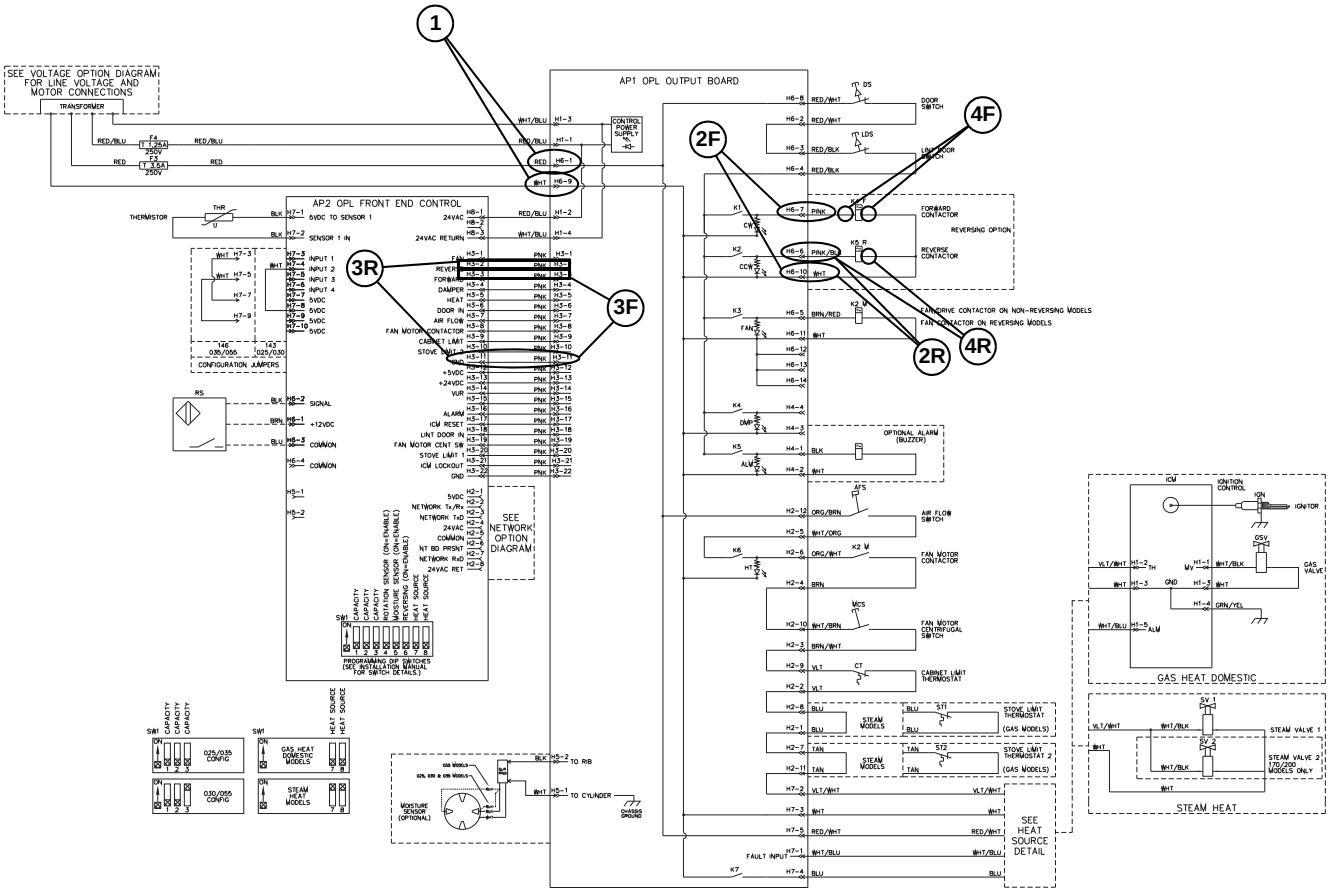

No Drive Motor Rotation (Drawing 2 of 2)

NOTE: The door and lint door must be closed for voltage to be present at the forward and reverse outputs.

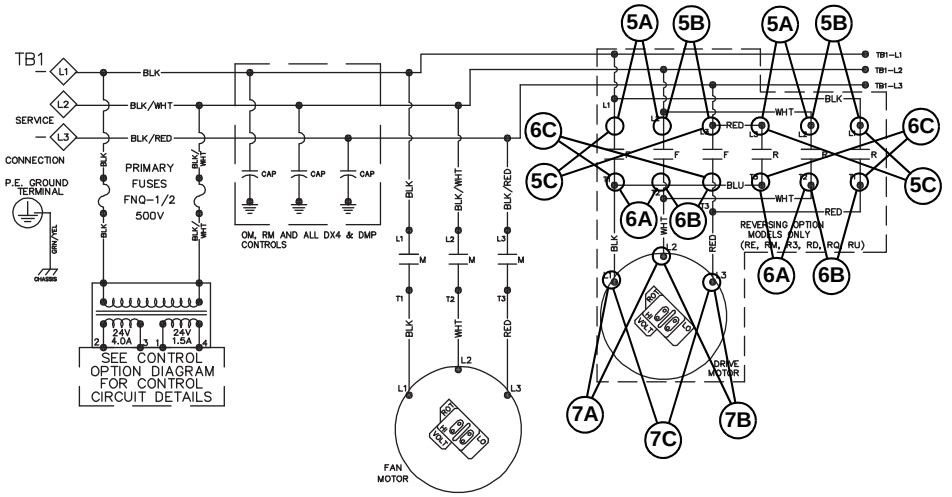

TMB2387S

46. Stove and Cabinet Limit Errors

UniLinc Error Display: Stove and Cabinet Limit Errors
LED OPL Error Display: E Cab
E SL
E SL2

NOTE: The machine must currently be trying to heat with airflow switch closed, fan motor contactor engaged and fan motor centrifugal switch closed before checking the status of the cabinet, stove and stove 2 limits.

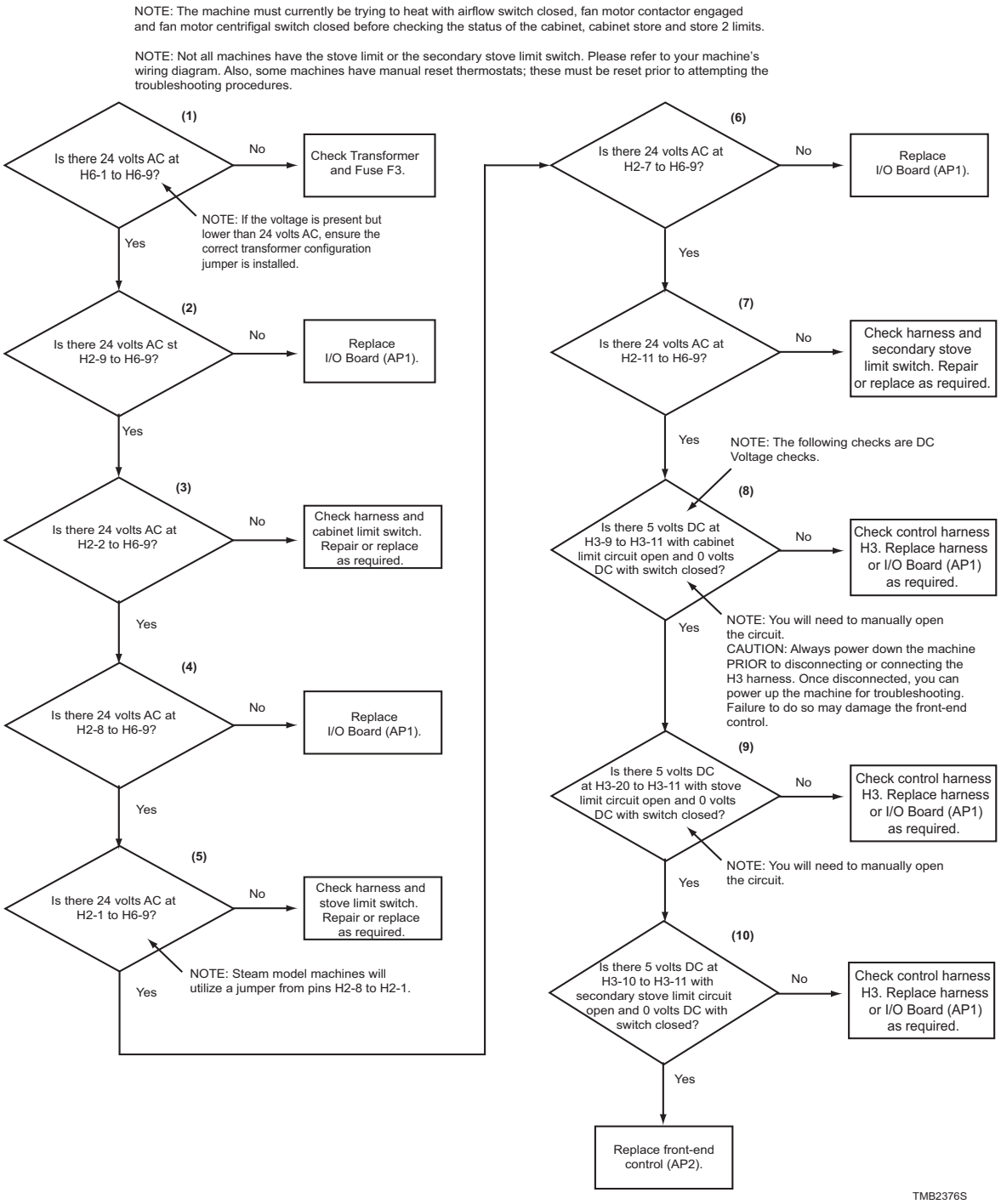

Stove Cabinet Limit Errors

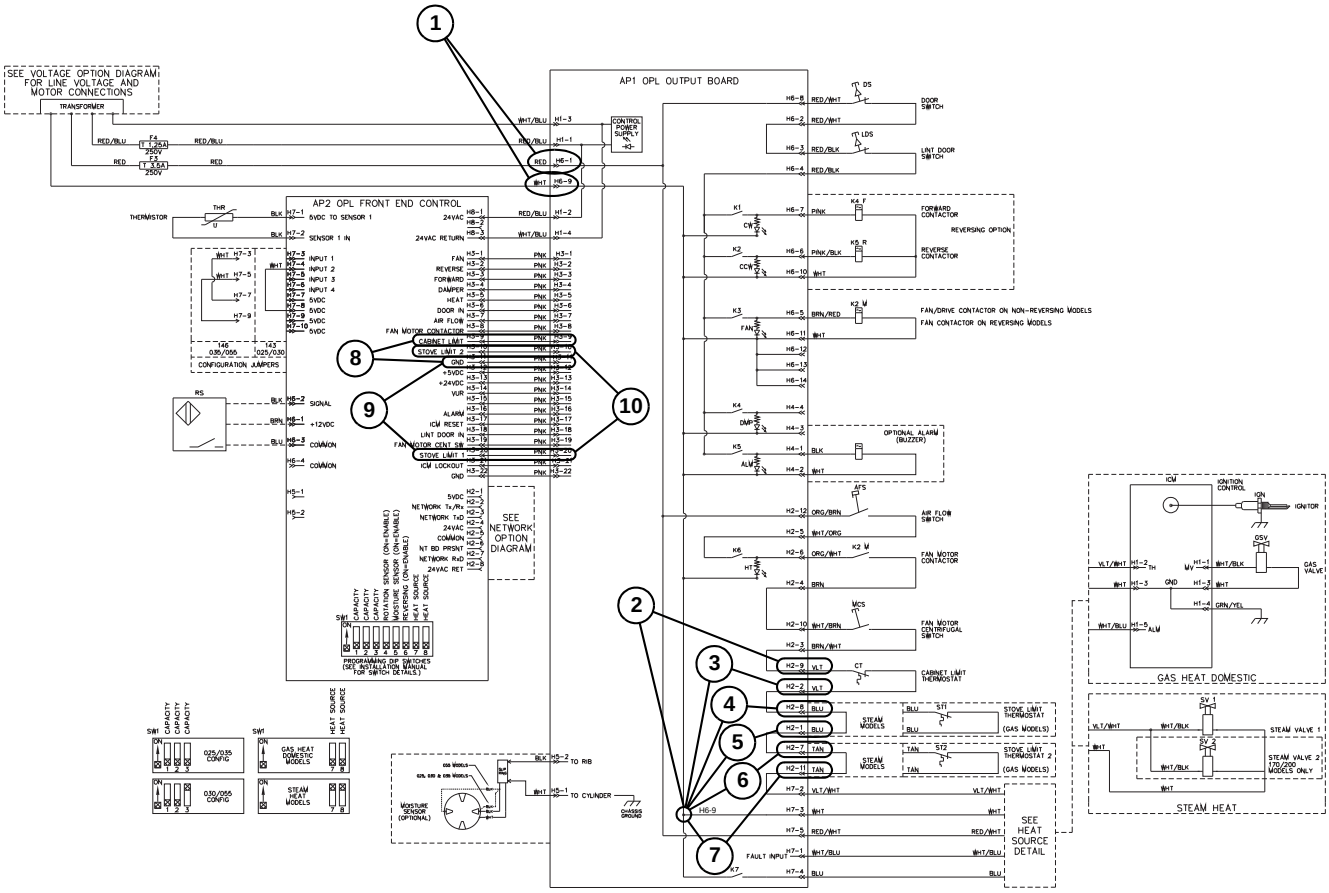

TMB2383S

47. No Display

NOTE: On the UniLinc LCD-equipped machines, verify the contrast is set correctly prior to troubleshooting.

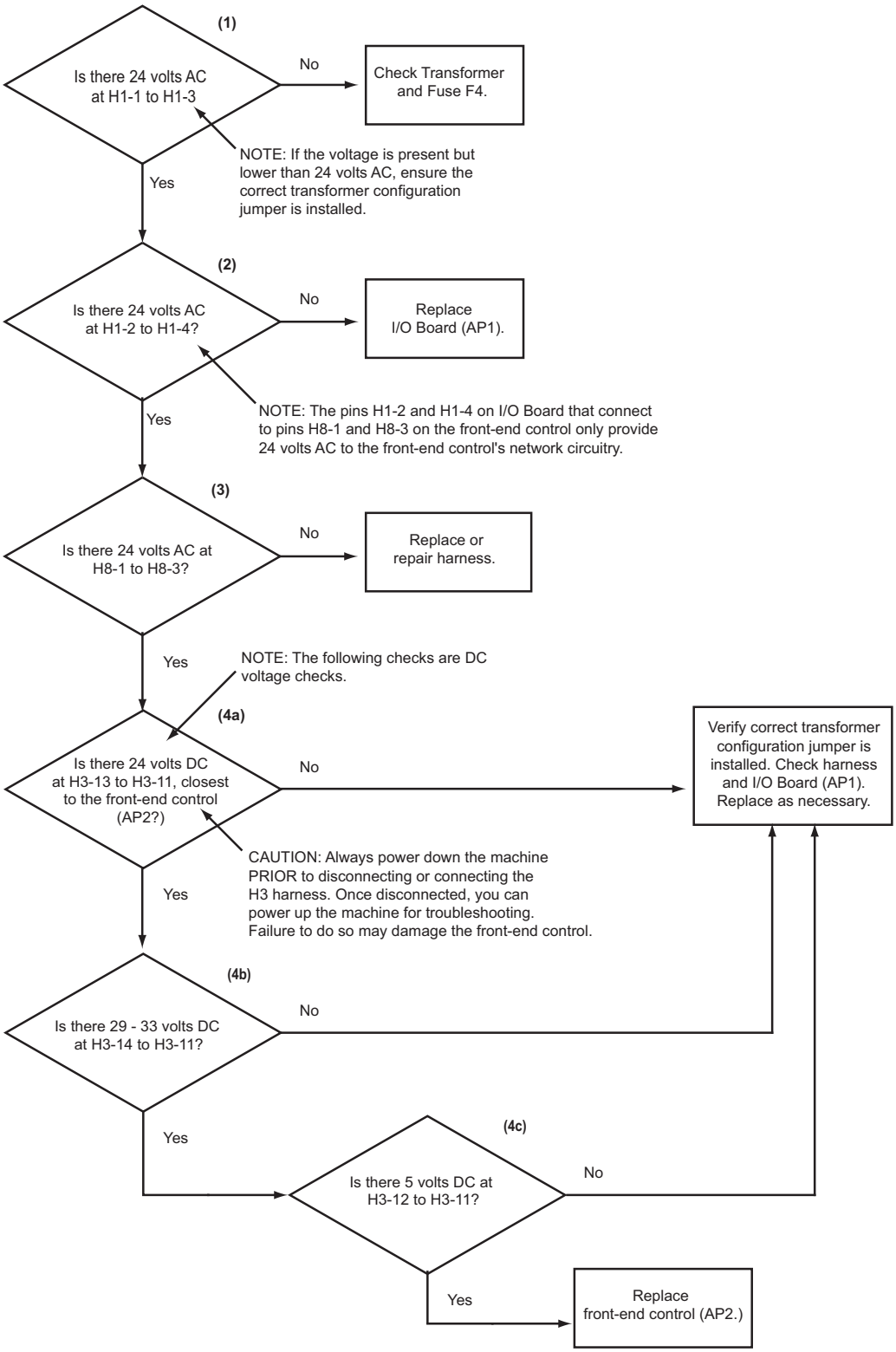

No Display

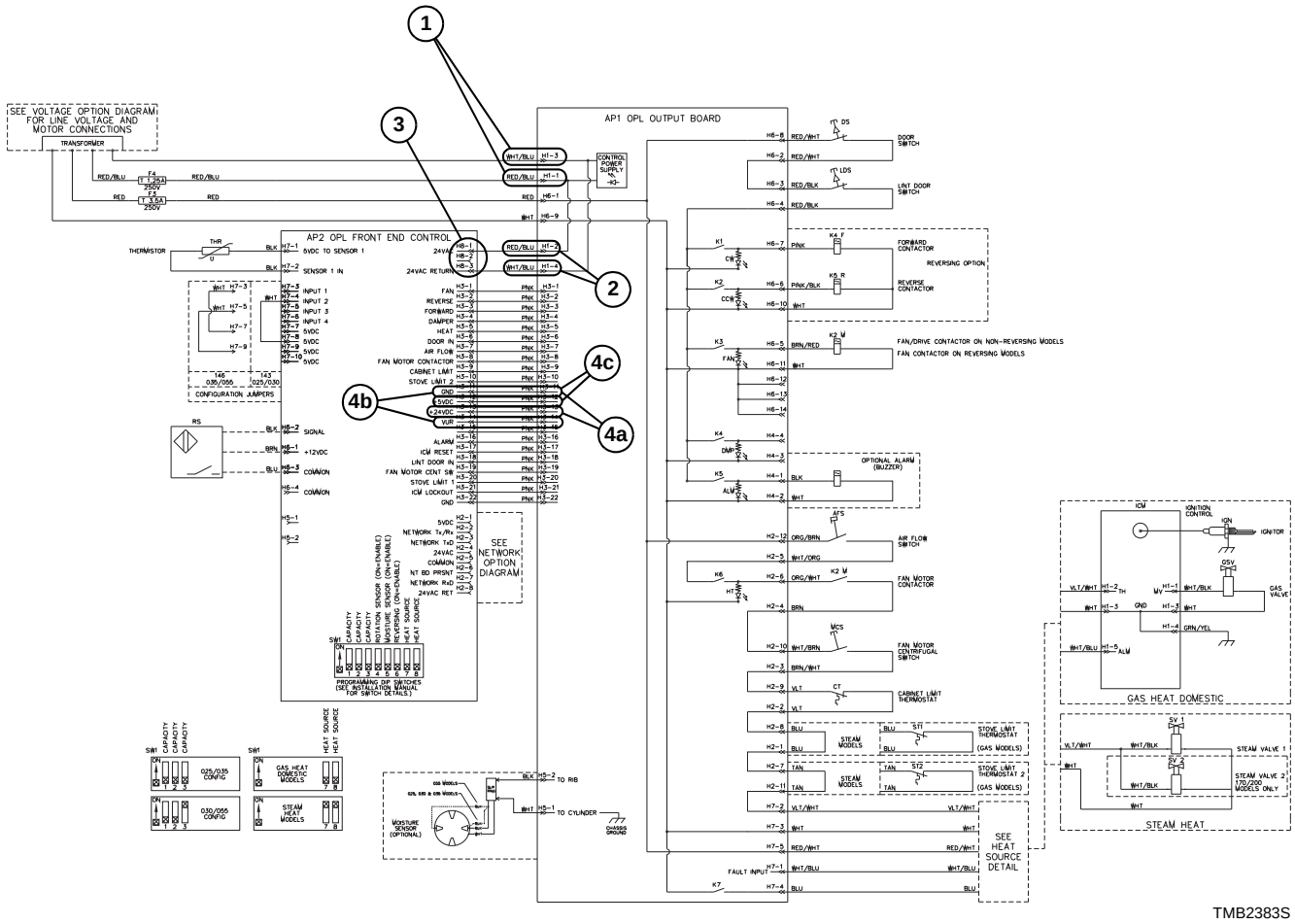

48. Airflow Errors

UniLinc Error Display: **Airflow Switch Sensed Closed While Not In Run Mode**
Airflow Switch Does Not Close After Cycle Started
Airflow Switch Bounces During A Running Cycle

LED OPL Error Display: **E AF1**
E AF2
E AF

NOTE: Check airflow switch for proper mechanical operation; ensure there is no lint or other items interfering with the proper operation.

NOTE: The airflow switch is required to be open prior to the beginning of the cycle. The switch is also required to close within the cycle.

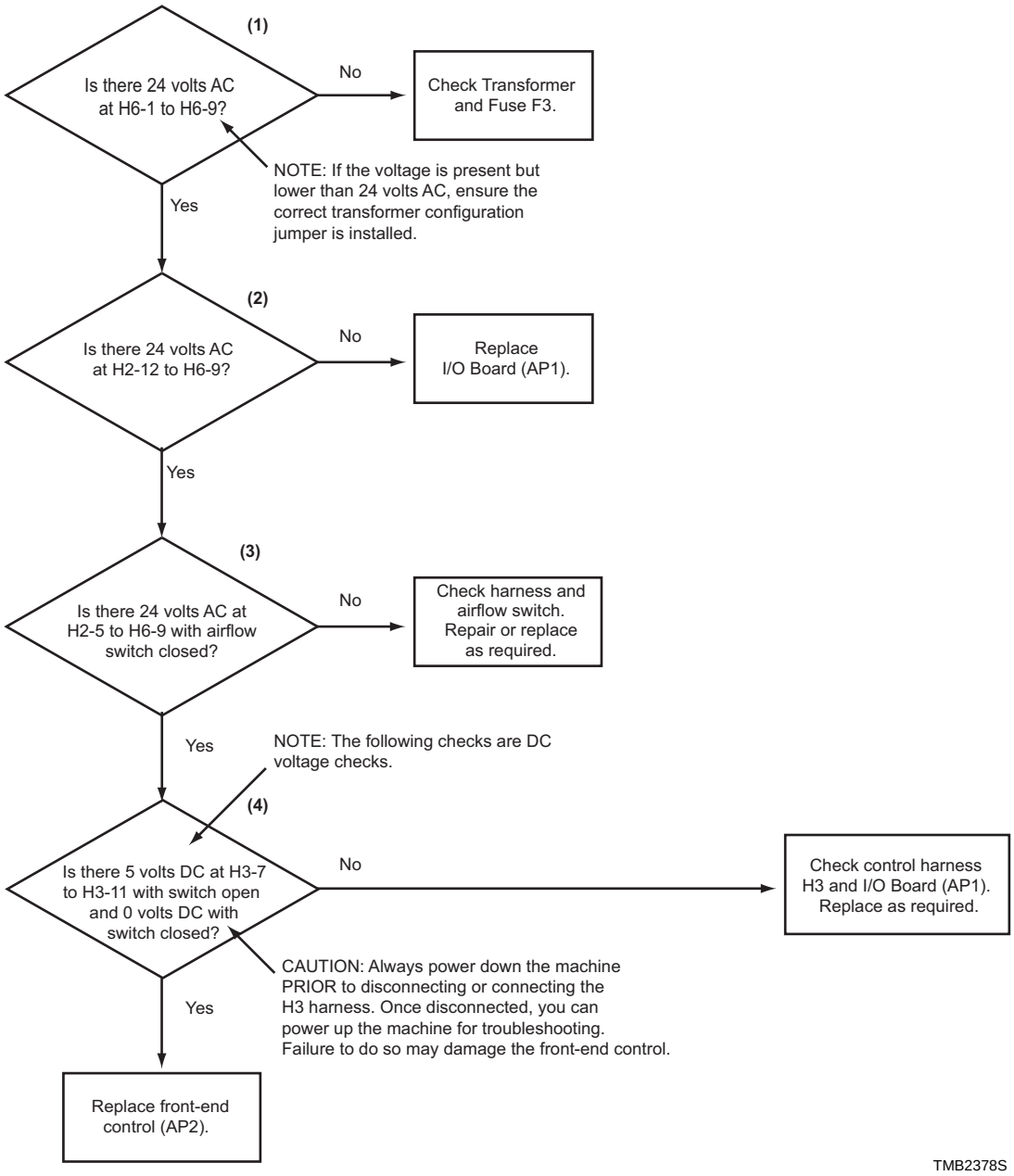

Airflow Errors

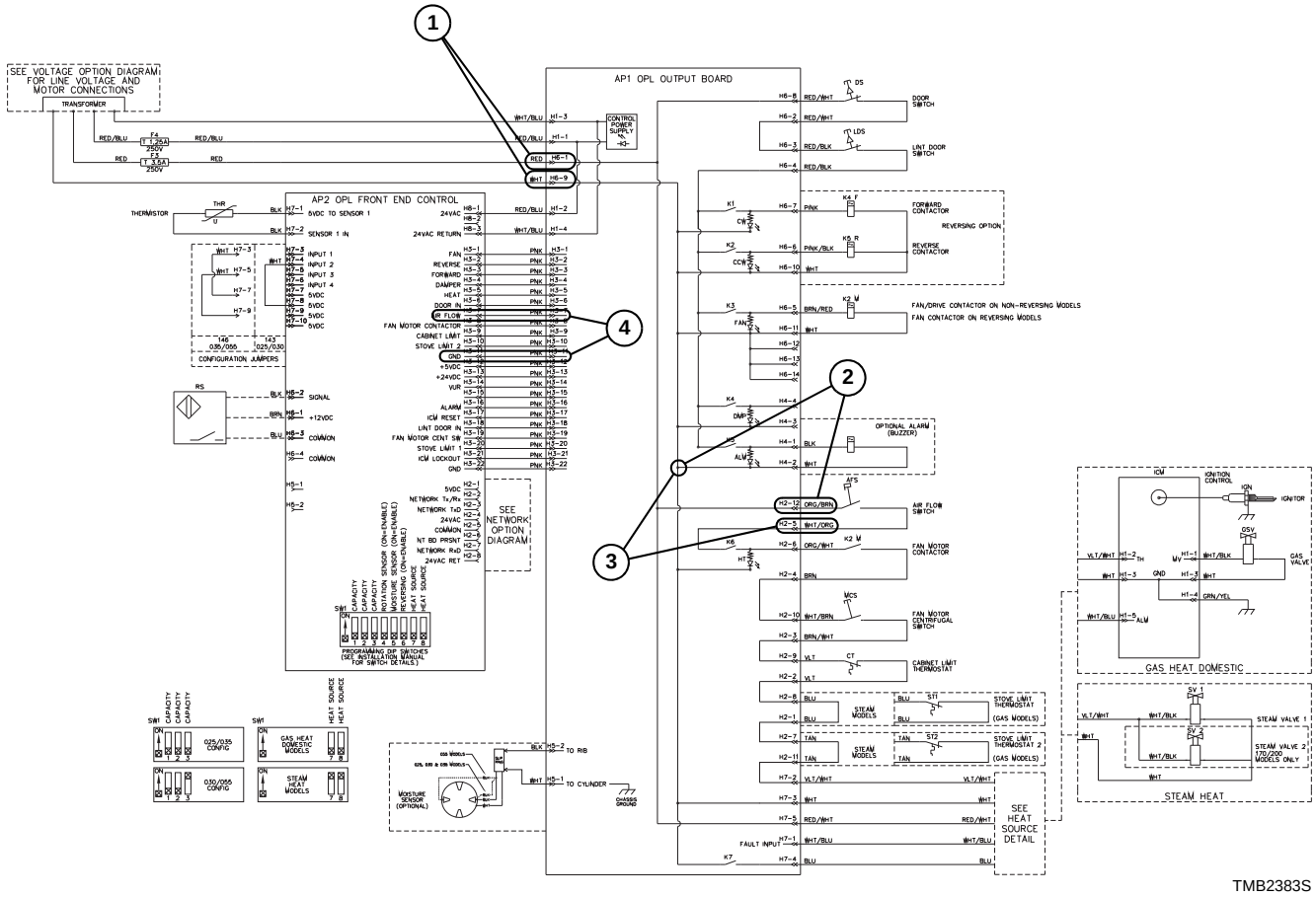

49. Fan Motor Centrifugal Switch Error

UniLinc Error Display: Fan Motor Centrifugal Switch Error
LED OPL Error Display: E FnCs

NOTE: Before performing these checks, the airflow switch must be pulled in, the fan motor contactor must be closed, and the motor must be running.

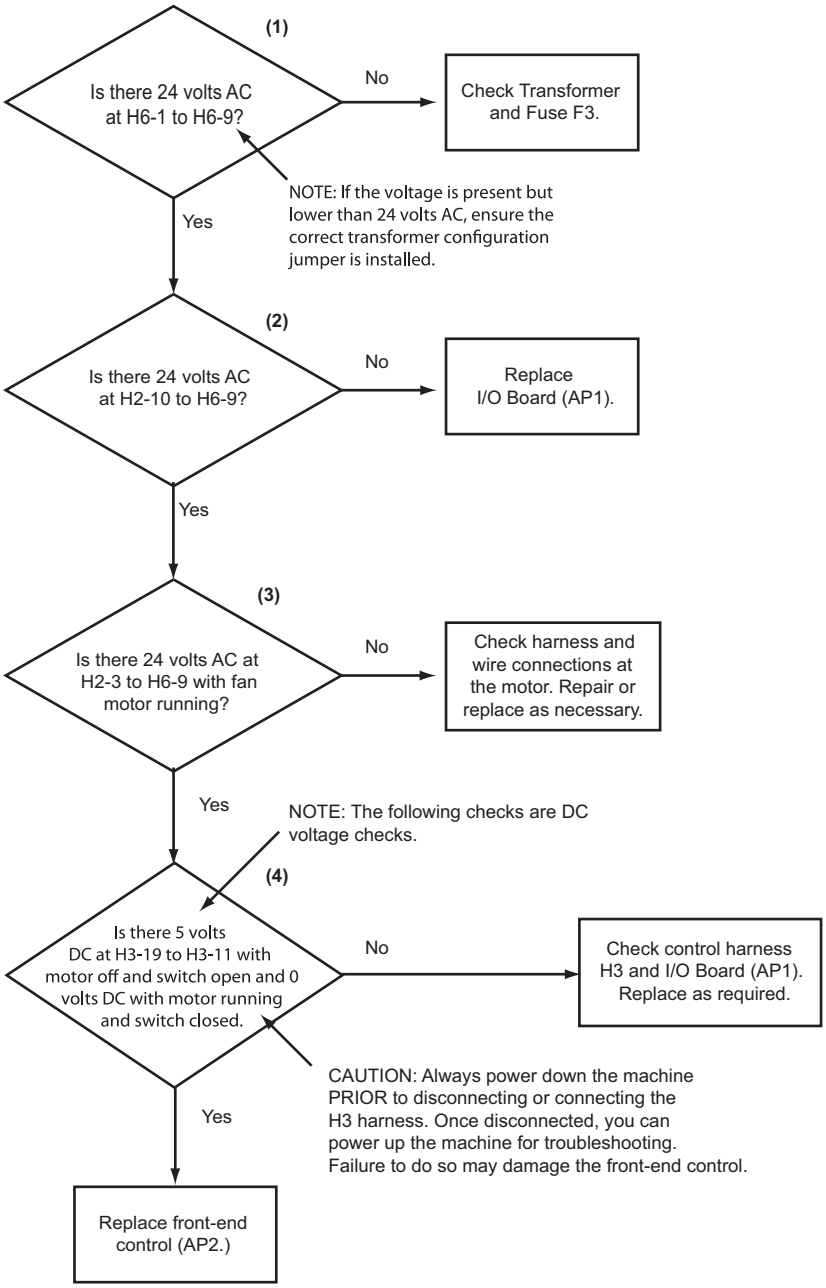

TMB2379S

Fan Motor Centrifugal Switch Error

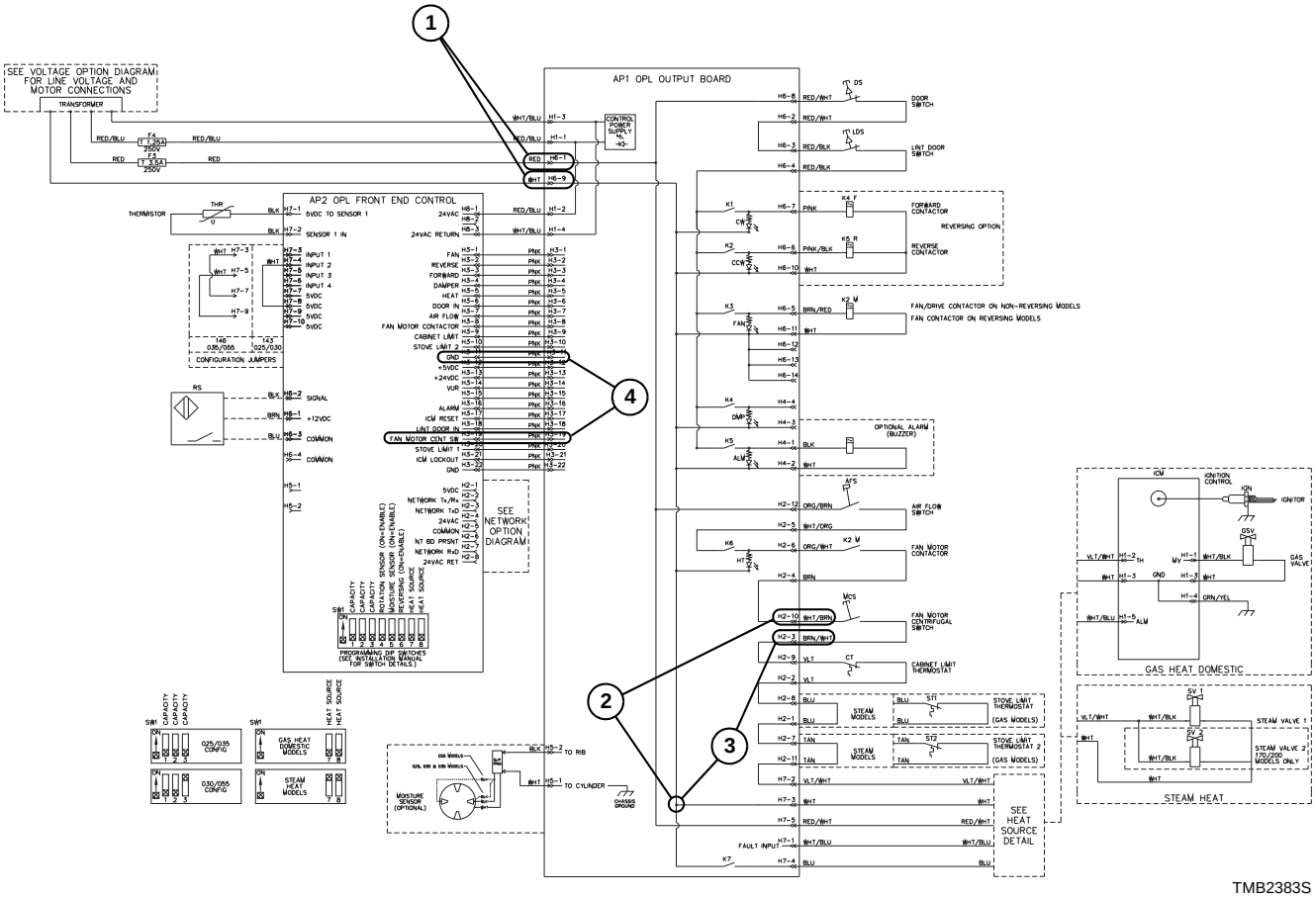

50. Close Door Indication

NOTE: Before proceeding, check the lint door, loading doors and switches for proper mechanical operation.

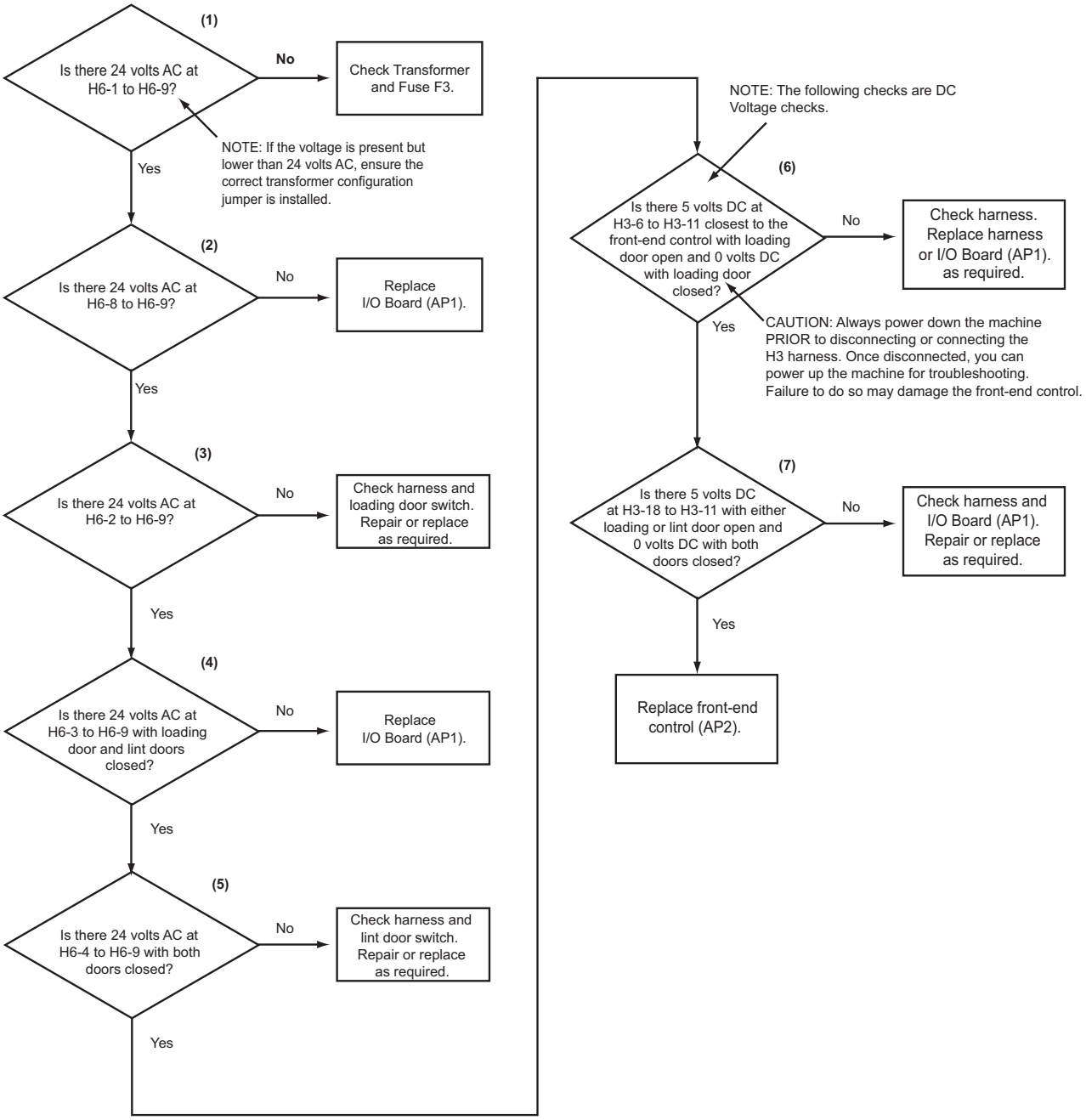

Close Door Indication

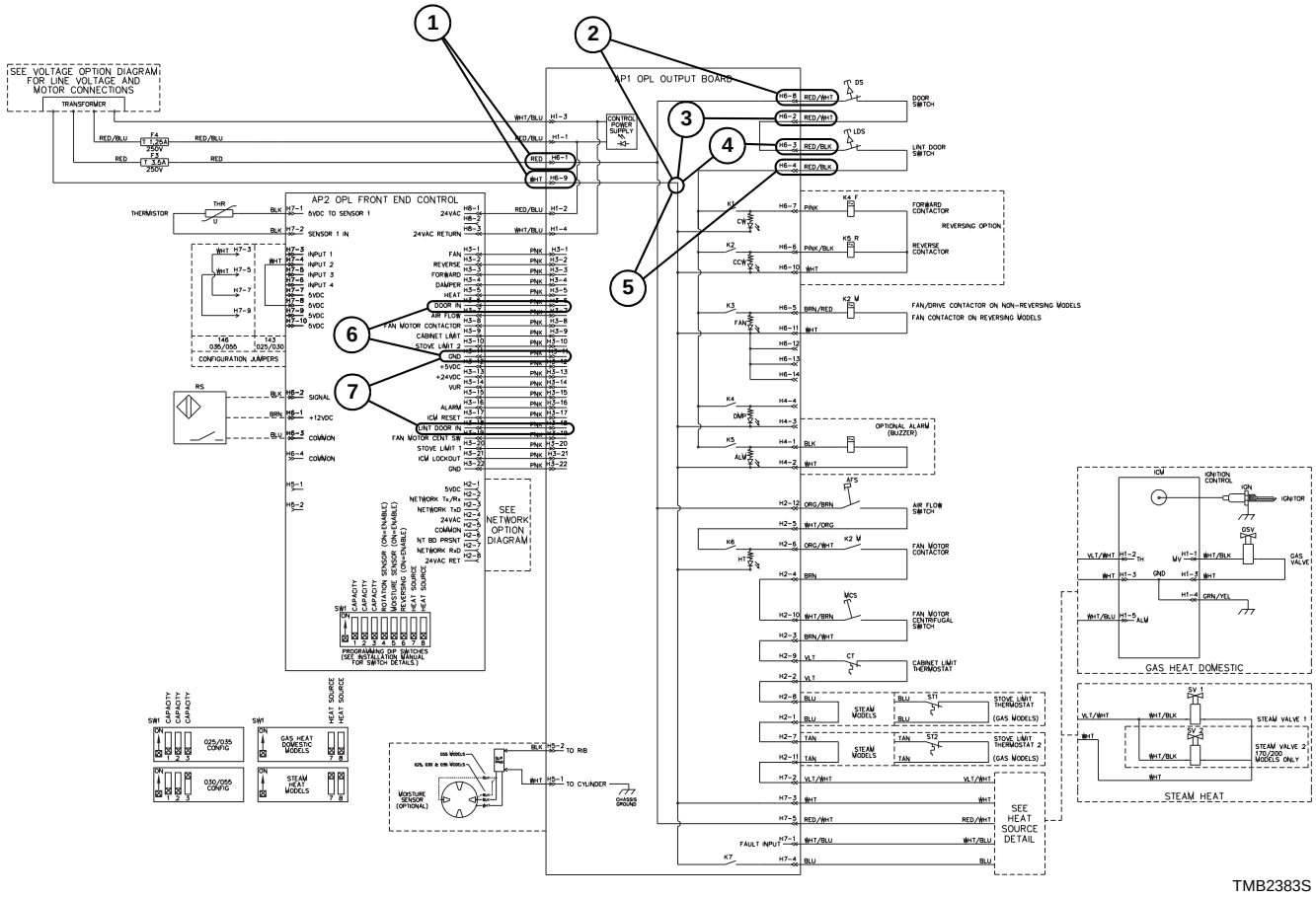

TMB2383S

51. Moisture Sensor Error

UniLinc Error Display: Moisture Sensor Error
LED OPL Error Display: EnoiST

NOTE: Before troubleshooting the Moisture Sensor Error, run the Moisture Sensor Tests found in *Table 5*.

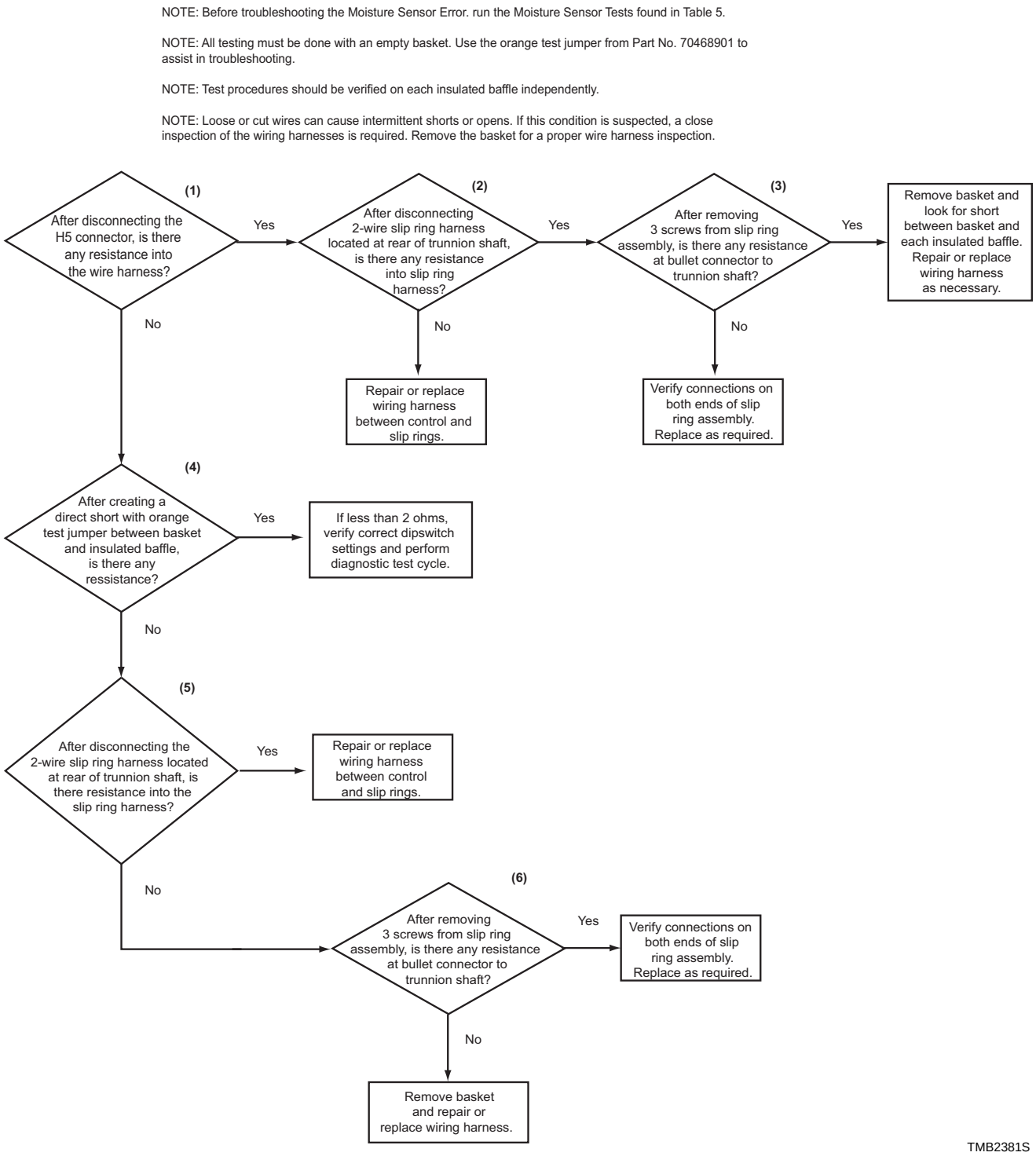

Moisture Sensor Error

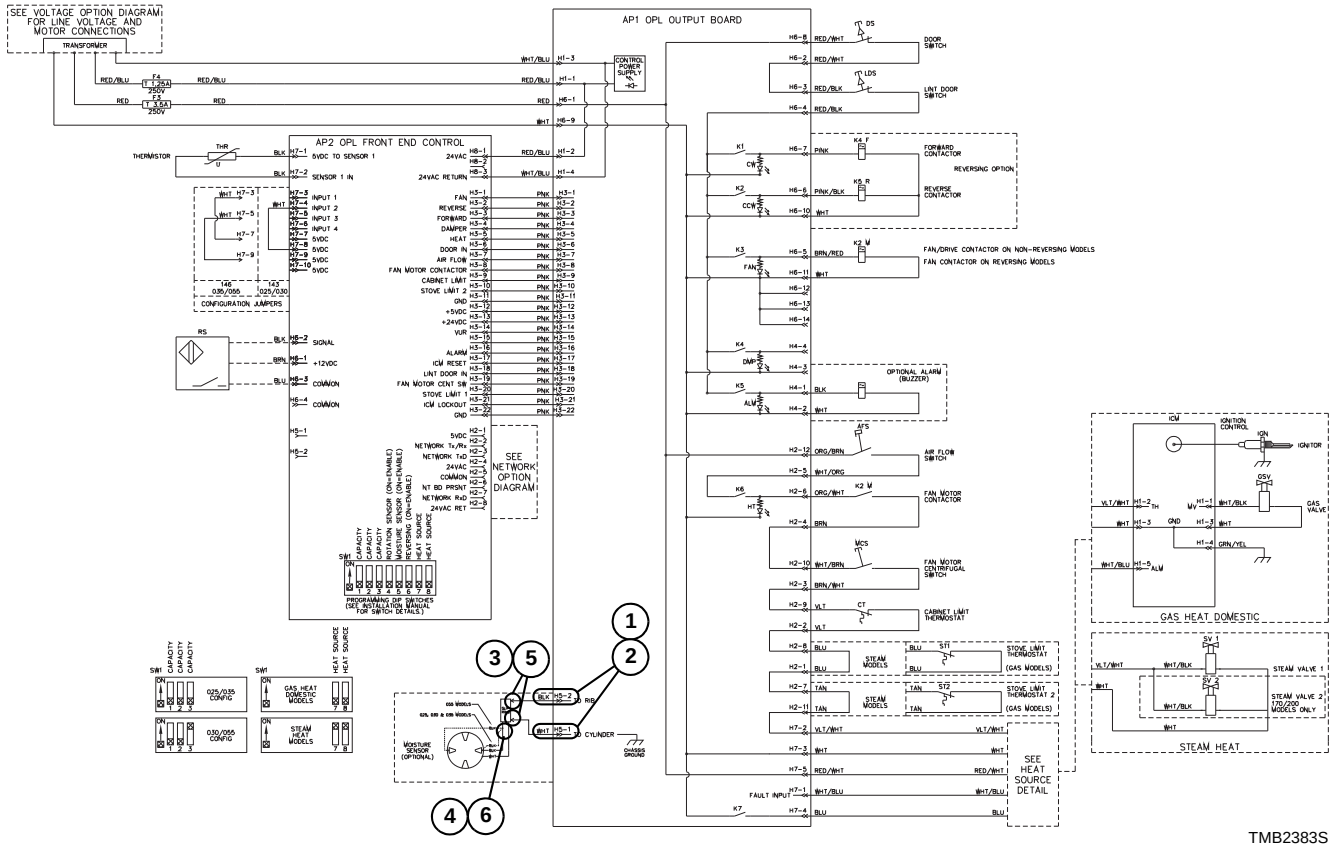

TMB2383S

Troubleshooting the Moisture Sensor Circuit

WARNING

To reduce the risk of electric shock, fire, explosion, serious injury or death:
- **Disconnect electric power to the tumble dryer before servicing.**
- **Close gas shut-off valve to gas tumble dryer before servicing.**
- **Close steam valve to steam tumble dryer before servicing.**
- **Never start the tumble dryer with any guards/panels removed.**
- **Whenever ground wires are removed during servicing, these ground wires must be reconnected to ensure that the tumble dryer is properly grounded.**

W002R1

NOTE: Troubleshooting must be done with the machine basket empty.

52. Troubleshooting at the Control

1. On the control board, unplug the harness from header H5 (Refer to *Figure 9*).

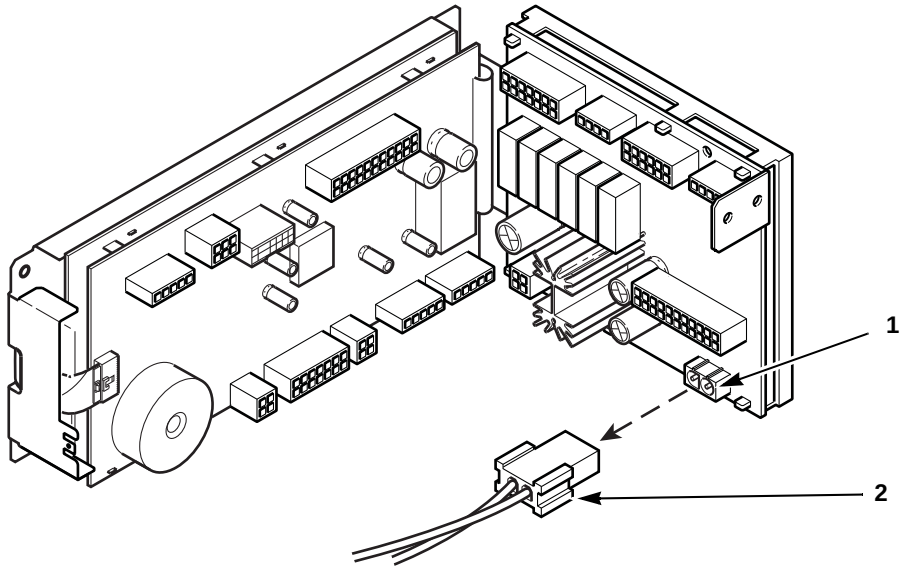

TMB2396S

1	H5
2	Harness

Figure 9

2. Insert ohm meter probes into pins 1 and 2 of the harness. If the metered value is infinite resistance, open load (OL), proceed to step 3. If not, proceed to *Paragraph 53*.
3. Create a direct short between machine basket and moisture sensing baffle/ground using test jumper (Refer to *Figure 10*). If metered value is less than 1 ohm, circuit is functioning properly; double-check machine configuration and cycle programming. If 1 ohm or greater, proceed to *Paragraph 53*.

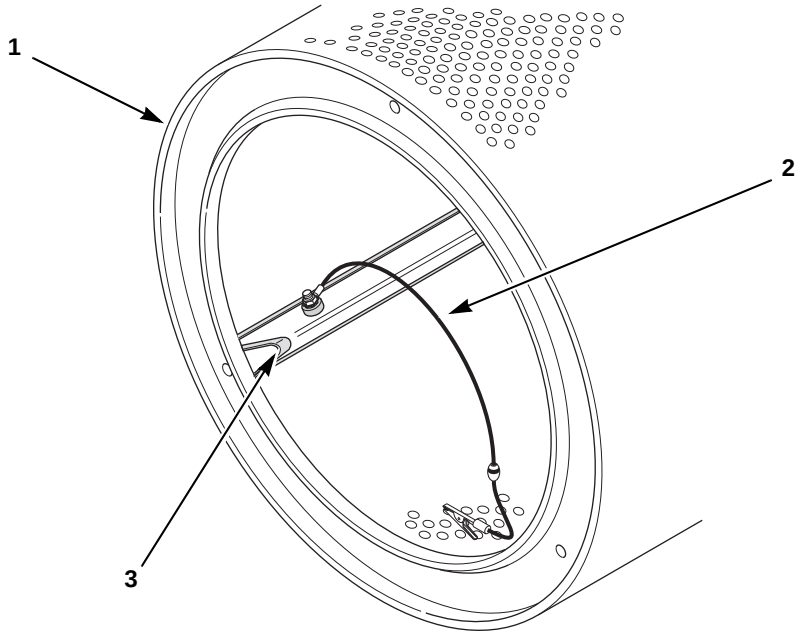

TMB2397S

1	Basket
2	Test Jumber
3	Moisture Sensing Baffle

Figure 10

53. Troubleshooting From Control to Slip Ring Assembly

1. At the control, unplug harness at header H5 (Refer to *Figure 9*).
2. At the slip ring assembly, unplug the moisture sensing harness on the control side of the slip ring assembly (Refer to *Figure 11*).

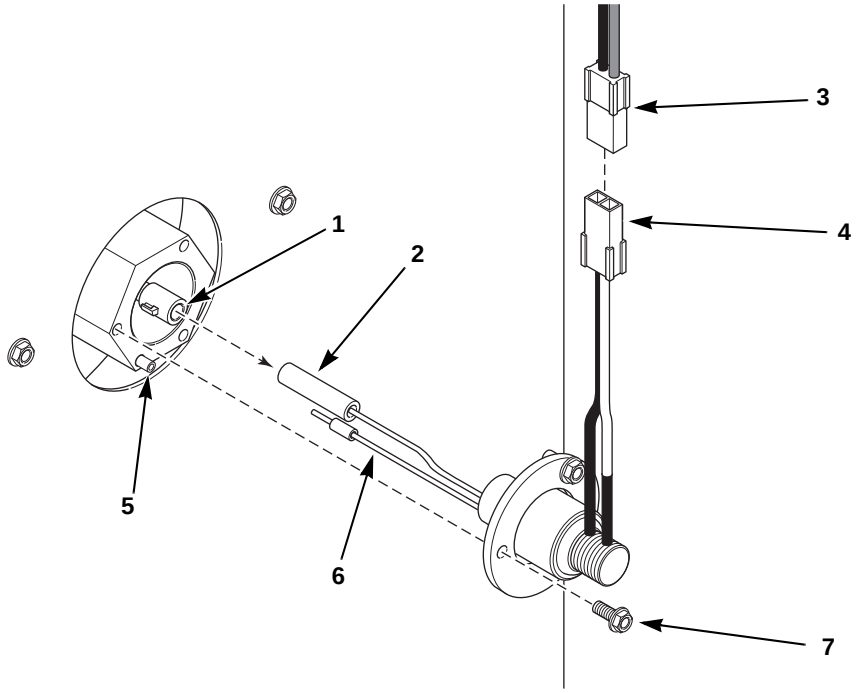

1	Connector
2	Black Wire
3	Moisture Sensing Harness
4	Slip Ring Assembly Harness
5	Set-Screw
6	White Wire
7	Screws

Figure 11

3. The harness from the control leads into a junction panel before reaching the slip ring assembly. Inspect junction panel for intermittent connections or unplugged harnesses (Refer to *Figure 12*).

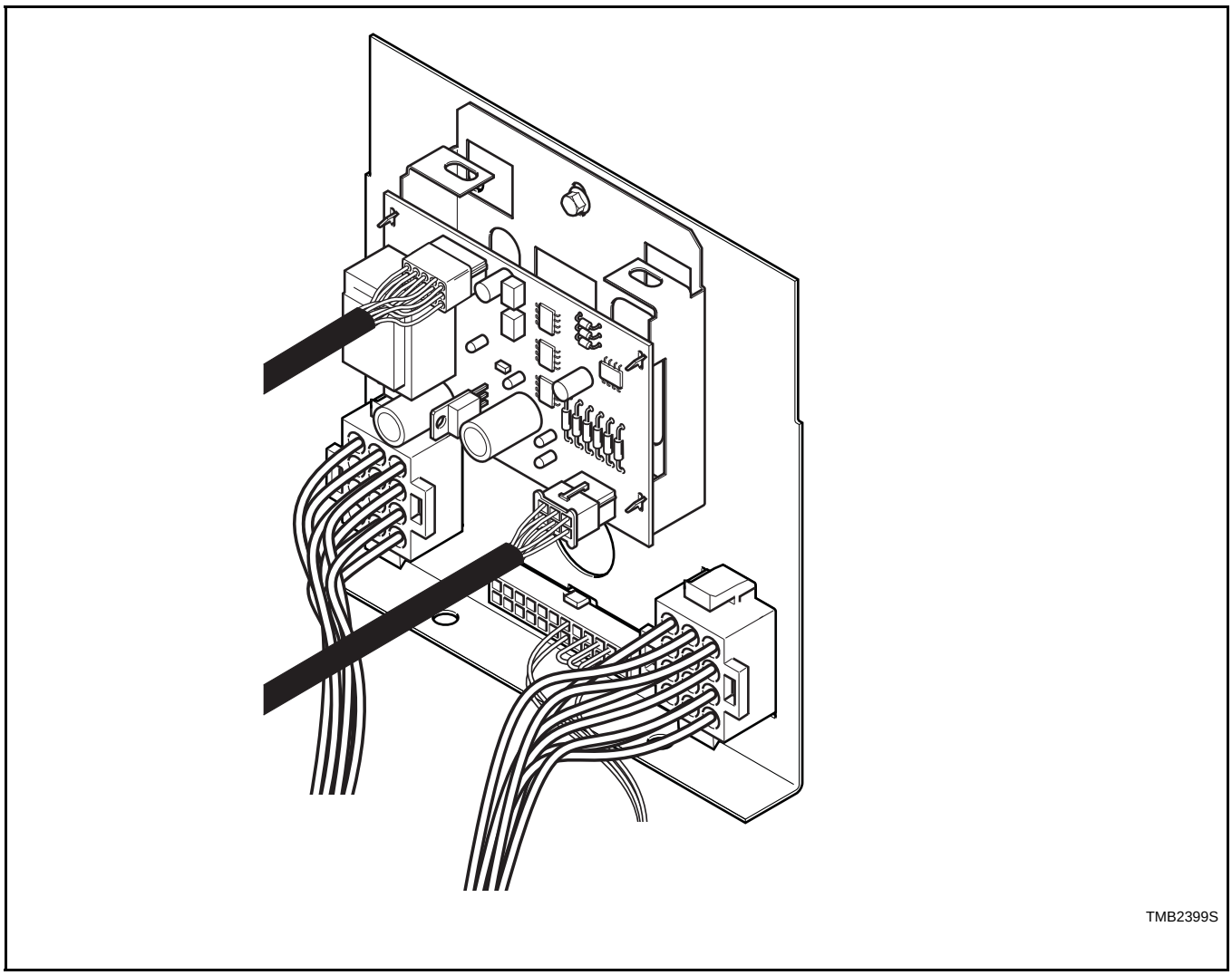

Figure 12

4. An additional harness connection exists between the junction panel and the slip ring assembly. Inspect connection for intermittent connections or unplugged harness.
5. Insert ohm meter probes into pins 1 and 2 of the harness unplugged from H5. If the metered value is infinite resistance, open load (OL), proceed to Step 6. If not, replace harness and return to *Paragraph 52*.
6. Create a direct short between pin 1 and 2 of the moisture sensing harness on the control side of the slip ring assembly (Refer to *Figure 11*). If the metered value is less than 1 ohm, proceed to *Paragraph 54*. If 1 ohm or greater, replace harness and return to *Paragraph 52*.

54. Troubleshooting At Slip Ring Assembly

1. At the slip ring assembly, unplug the slip ring assembly harness on the control side of the slip ring assembly (Refer to *Figure 11*).
2. Remove the three (3) screws holding the slip ring assembly to basket shaft.
3. Carefully disconnect the white wire of the slip ring assembly from the set-screw on the basket shaft.
4. Carefully disconnect the black wire of the slip ring assembly from the connector in the basket shaft.
5. Connect one ohm meter probe to the black wire on the basket side of the slip ring assembly, and connect the other ohm meter probe to the black wire of the slip ring assembly harness. If the metered value is less than 1 ohm, proceed to Step 6. If 1 ohm or greater, replace slip ring assembly and return to *Paragraph 52*.
6. Connect one ohm meter probe to white wire on the basket side of the slip ring assembly, and connect the other ohm meter probe to the white wire of the slip ring assembly harness. If the metered value is less than 1 ohm, proceed to *Paragraph 55*. If 1 ohm or greater, replace slip ring assembly and return to *Paragraph 52*.

55. Troubleshooting From Slip Ring Assembly to Moisture Sensing Baffle and Basket

1. Remove three (3) screws holding slip ring assembly to basket shaft.
2. Carefully disconnect the white wire of the slip ring assembly from the set-screw on the basket shaft.
3. Carefully disconnect the black wire of slip ring assembly from the connector in the basket shaft.
4. Connect one ohm meter probe to the connector in the basket shaft. Connect the other ohm meter probe to the basket shaft itself. If the metered value is infinite resistance, open load (OL), proceed to Step 5. If not, remove machine basket and proceed to *Paragraph 56*.
5. Create a direct short between basket and moisture sensing baffle (Refer to *Figure 10*).
6. Connect one ohm meter probe to the connector in the basket shaft. Connect the other ohm meter probe to the basket shaft itself. If the metered value is less than 1 ohm, circuit is functioning properly; double-check machine configuration and cycle programming. If 1 ohm or greater, remove machine basket and proceed to *Paragraph 56.*

56. Troubleshooting from Basket Shaft to Moisture Sensing Baffle with Machine Basket Removed

1. Disconnect and remove slip ring assembly before removing machine basket.
2. Remove machine basket.

3. Connect one ohm meter probe to the connector in the basket shaft (Refer to *Figure 13*).

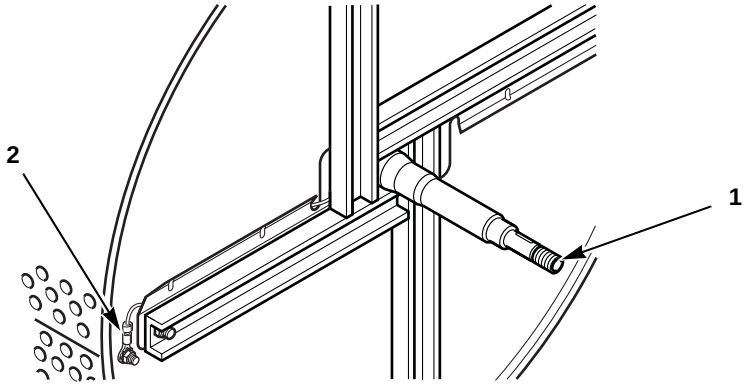

1 Connector
2 Gray Wire Harness Terminal

Figure 13

4. Connect the other ohm meter probe to one of the gray wire harness terminals on the back end of the machine basket. If the metered value is less than 1 ohm, proceed to Step 5. If 1 ohm or greater, replace harness and return to *Paragraph 52*.
5. Connect one ohm meter probe to the connector in the basket shaft.
6. Connect the other ohm meter probe to the other gray wire harness terminal on the back end of the machine basket. If the metered value is less than 1 ohm, proceed to Step 7. If 1 ohm or greater, replace harness and return to *Paragraph 52*.
7. Connect one ohm meter probe to the connector in the basket shaft.
8. Connect the other ohm meter probe to one of the moisture sensing baffles (refer to *Figure 10*). If the metered value is less than 1 ohm, proceed to Step 9. If 1 ohm or greater, proceed to *Paragraph 57*.
9. Connect one ohm meter probe to the connector in the basket shaft.
10. Connect the other ohm meter probe to the other moisture sensing baffle. If the metered value is less than 1 ohm, circuit is functioning properly; double-check machine configuration and cycle programming. If 1 ohm or greater, proceed to *Paragraph 57*.

57. Troubleshooting at the Moisture Sensing Baffles with Machine Basket Removed

1. Disassemble moisture sensing baffle and inspect for lint buildup and foreign objects. Verify wire harness connections.
2. Disassemble other moisture sensing baffle and inspect for lint buildup and foreign objects. Verify wire harness connections.
3. Double-check machine configuration and cycle programming.

58. Fan Motor Contactor Error

UniLinc Error Display: Fan Motor Contactor Error
LED OPL Error Display: E FCon

NOTE: Before performing these checks, the airflow switch must be pulled in, and the motor must be running.

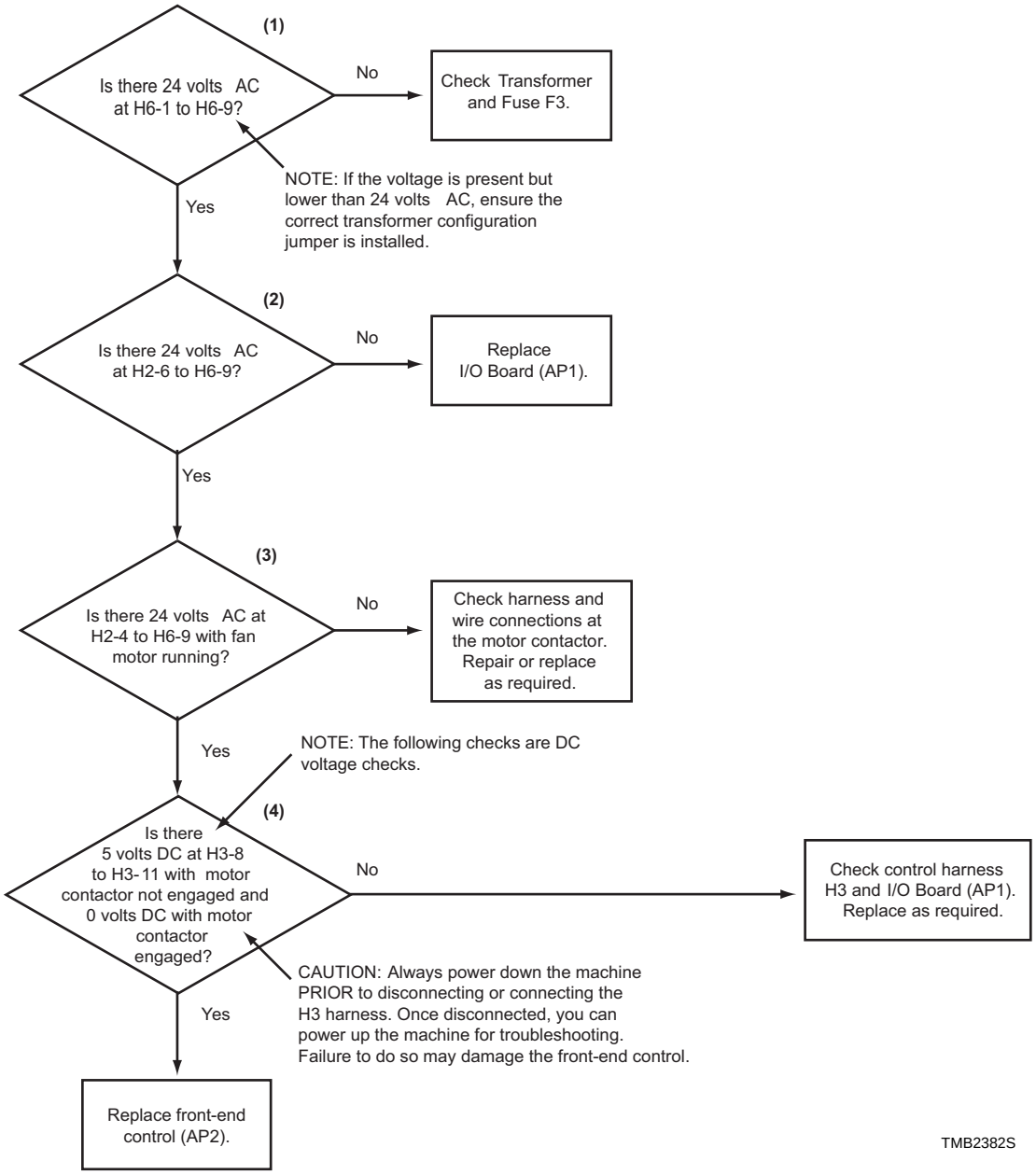

Fan Motor Contactor Error

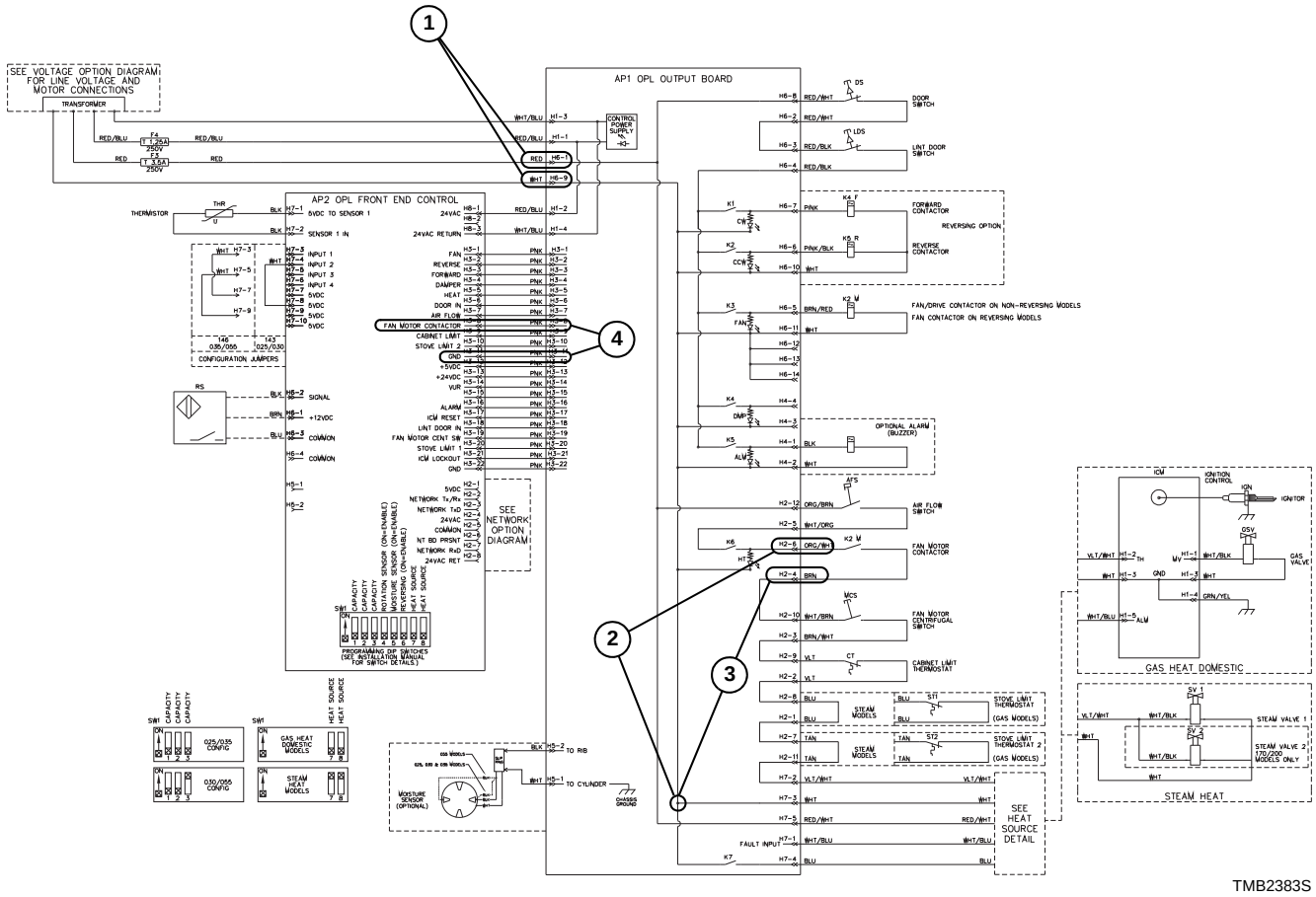

TMB2383S

59. Rotation Sensor Error

UniLinc Error Display: Rotation Sensor Error
LED OPL Error Display: E rot

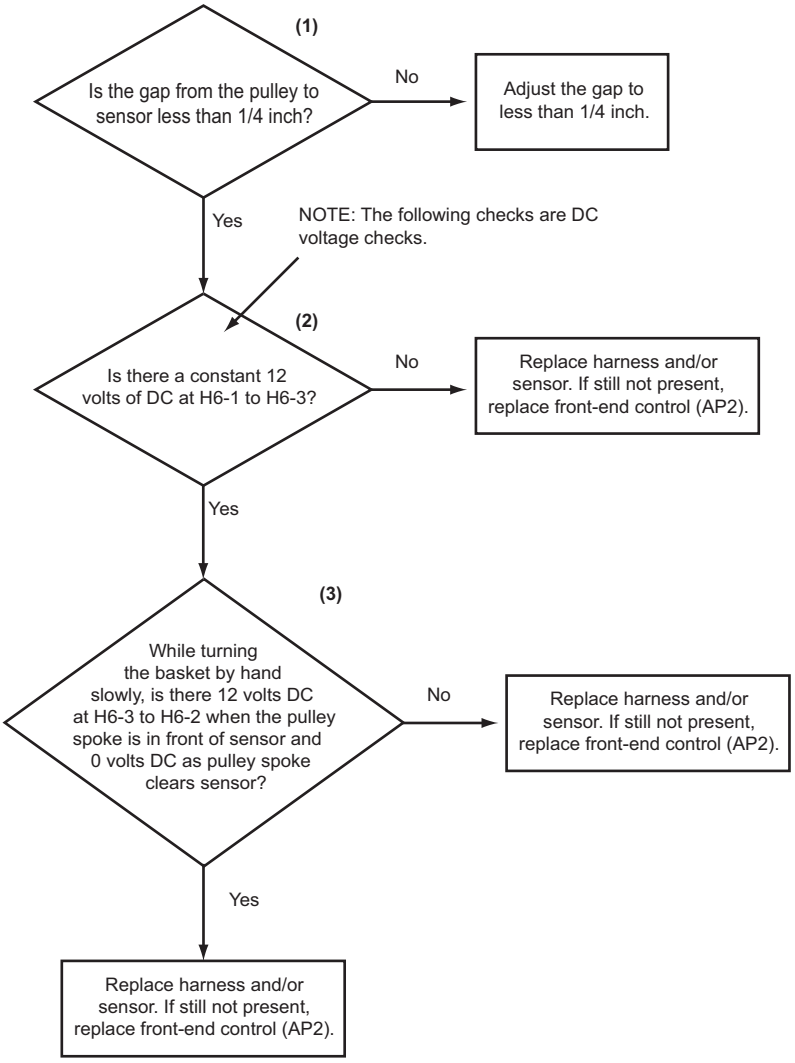

TMB2392S

Rotation Sensor Error

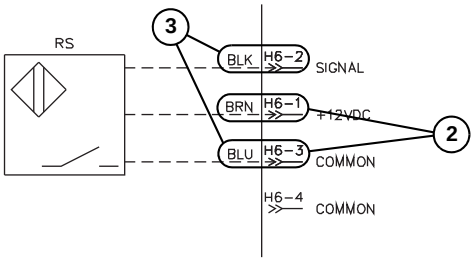

TMB2389S

60. Shorted or Open Thermistor

UniLinc Error Display: **Shorted Thermistor**
Open Thermistor

LED OPL Error Display: **ESH**
EoP

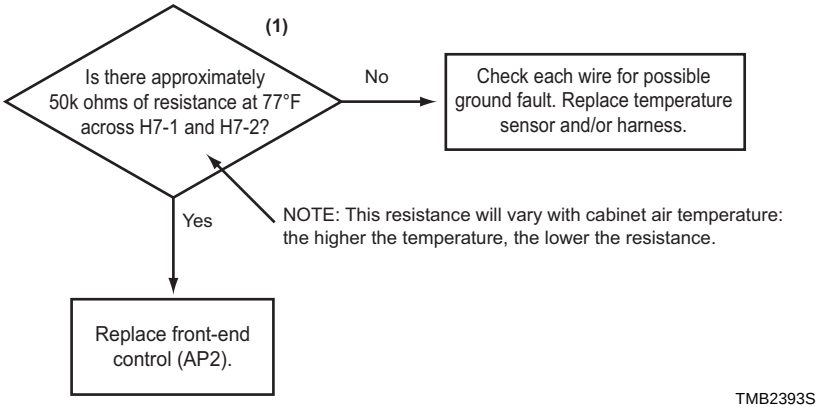

Shorted or Open Thermistor

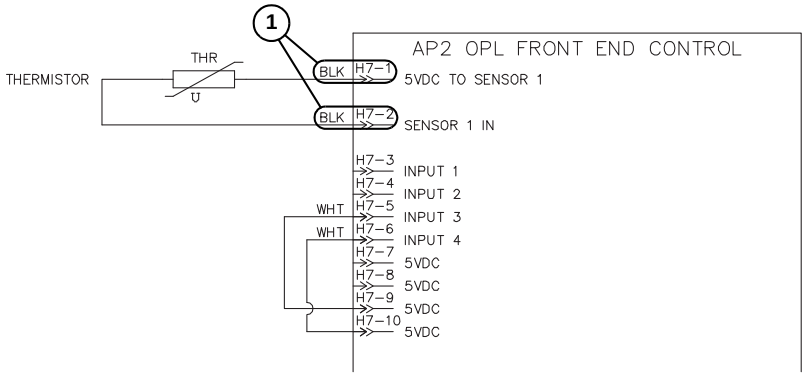

TMB2390S

61. Fuses and Transformer Configuration Jumper

Check F3 and F4 fuses and verify the jumper. Jumper options shown below.

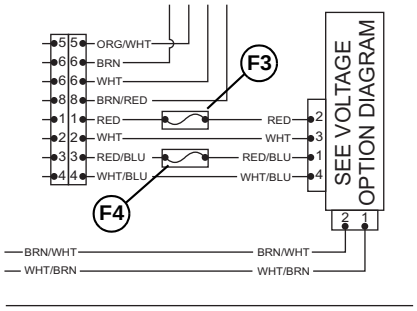

SECONDARY FUSES	
F3	5 X 20mm 3.5A 250V
F4	5 X 20mm 3.25A 250V

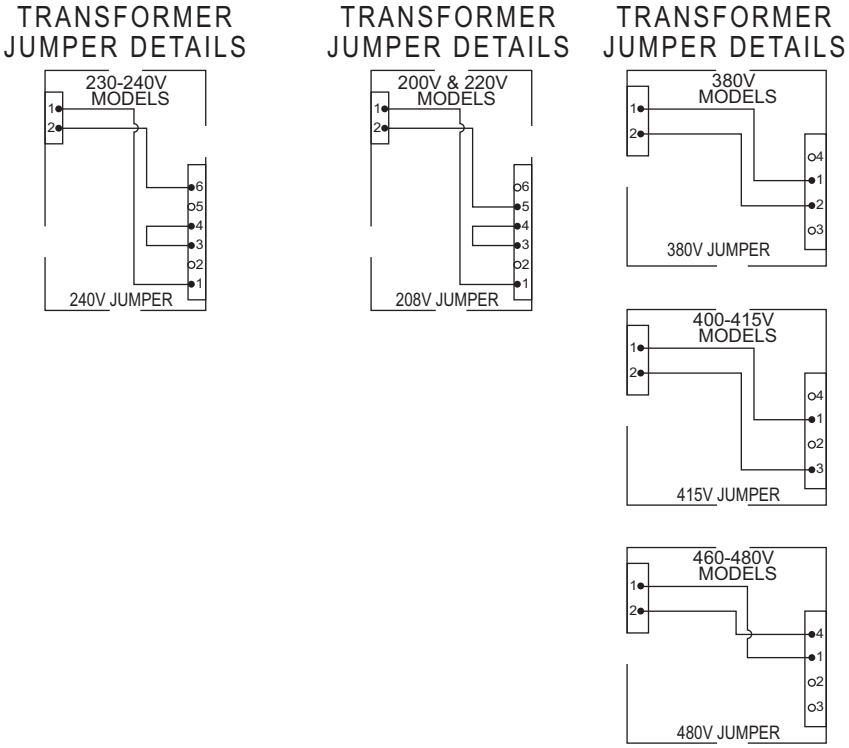

TMB2391S

62. Dip Switch/Harness Index Mismatch

Verify the dip switches are in the correct position and the jumper harness is installed on front-end control (AP2).

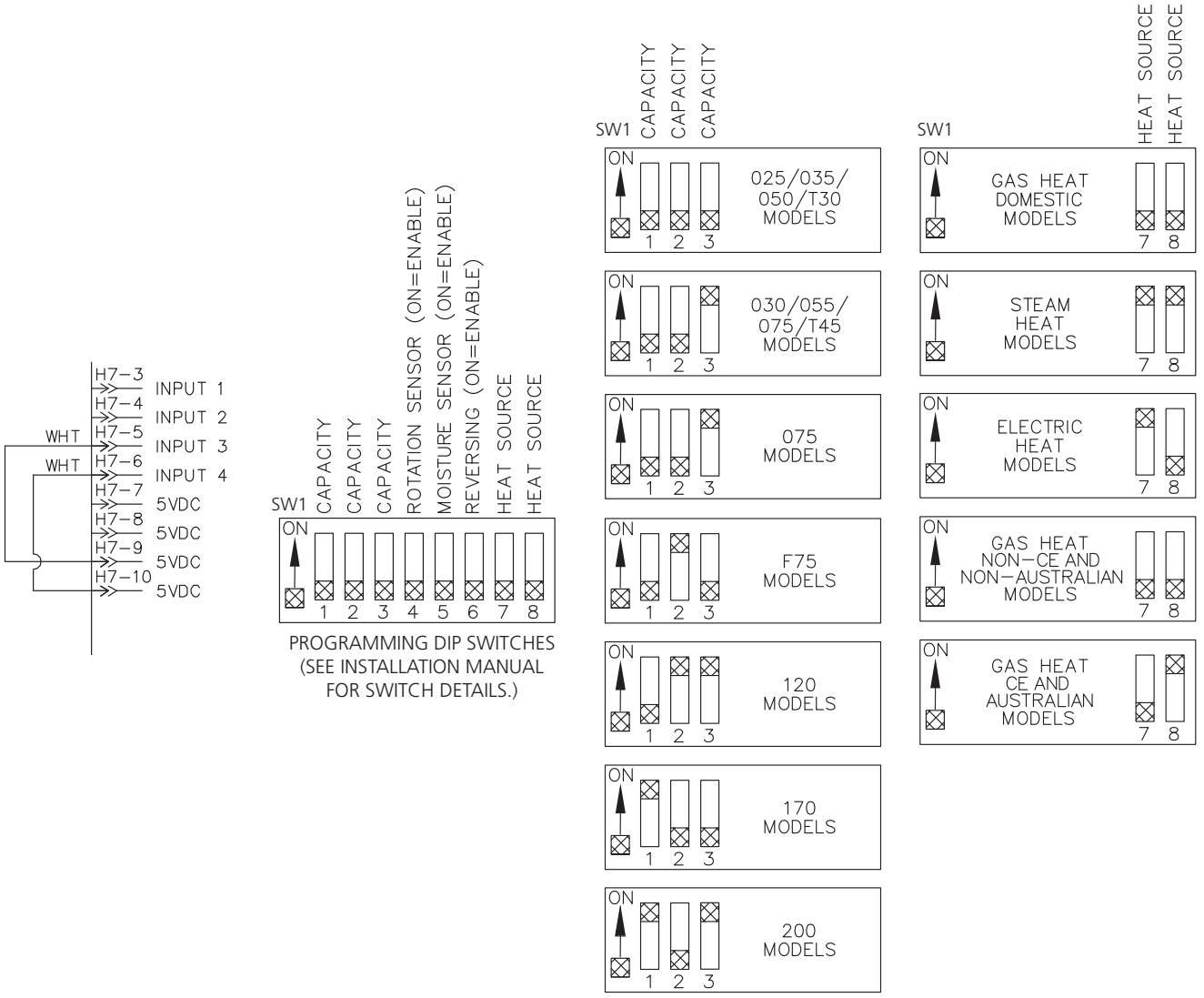

63. Electronic Control Testing
Models with RE Control Suffix

This feature allows the owner to run diagnostic tests on various tumble dryer operations without servicing the tumble dryer. The tests that are available are shown in *Table 2*.

For an overview of the manual diagnostic test feature, refer to the flowchart on the following page.

How to Enter Testing Feature

1. Enter Manual Mode. Refer to ***Entering the Manual Mode***.
2. Press the Up (↑) or the Down (↓) keypad until "d iAg" appears.
3. Press the Start (◇/↵) keypad. Display will change to "dSoFt" indicating the control software version number test.
4. Press the Up (↑) or the Down (↓) keypad to scroll through the diagnostic test options.

How to Start Tests

To start a diagnostic test, refer to the quick reference chart below (*Table 2*). Press the Start (◇/↵) keypad when the desired test is displayed. For detailed information on each test, read the appropriate description.

How to Exit Testing Feature

Press the Back (←) keypad. The display will return to Idle Mode.

Diagnostic (Testing) Mode - Quick Reference Chart	
Display	**Diagnostic Mode**
"dSoFt"	Control Software Version
"ddoor"	Loading Door Status
"dL int"	Lint Door Status
"dHEAt"	Heater Interlock Test
"FCOnHH"	Fan Motor Contactor Status (HH represents input status, open "OP" or closed "CL"
"FnCSHH"	Fan Motor Centrifugal Switch Status (HH represents input status, open "OP" or closed "CL"
"CAb HH"	Cabinet High Limit Thermostat Status (HH represents input status, open "OP" or closed "CL"
"SL HH"	Stove High Limit Thermostat 1 Status (HH represents input status, open "OP" or closed "CL"
"SL2 HH"	Stove High Limit Thermostat 2 Status (HH represents input status, open "OP" or closed "CL"
"dd iP"	DIP Switch Status
"d iCnAL"	ICM Alarm Status
"d iCnrS"	ICM Reset Test
"dEALrn"	External Alarm Test
"ddrYon"	Dryer On Temperature Test
"dtHEr"	Thermistor Temperature Test
"dConF2"	Machine Config #2 Display
"dConF3"	Machine Config #3 Display
"dAFS"	Airflow Switch Test
"dFAn"	Fan Motor Test
"ddAnPr"	Damper Motor Test*
"drEuSE"	Reverse Motor Test*
"drotAt"	Rotation Sensor Test*
"drnC 1"	Moisture Sensor Test (Shorted test jumper)*
"drnC 2"	Moisture Sensor Test (Resistance test jumper)*

* = Tests only shown if enabled by the DIP switch configuration.

Table 2

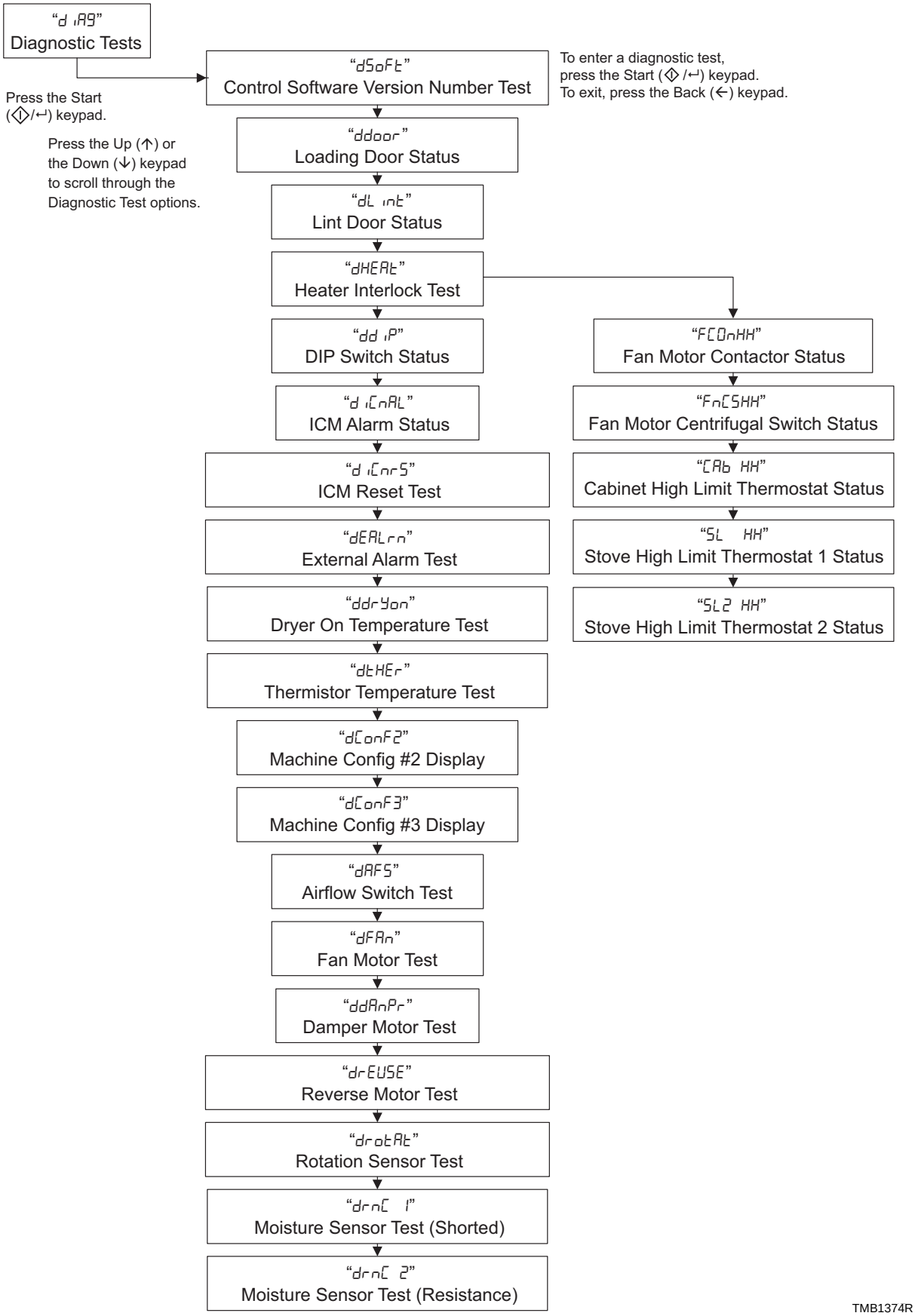

Diagnostic Test Descriptions

Control Software Version Number Test "dSoFt"

This option displays the control software version number. To start test, control must be in the Testing Mode. Refer to *"How to Enter Testing Feature"* at the beginning of this section.

To enter, press the Start (◇/↵) keypad. The display will show "S HH" where "HH" is the software version number.

To exit the Software Version Number Test, press the Back (←) keypad. The control will return to the testing mode.

Loading Door Test "ddoor"

This option tests the loading door switch. To start test, control must be in the Testing Mode. Refer to *"How to Enter Testing Feature"* at the beginning of this section.

To enter, press the Start (◇/↵) keypad. The display will show "doorOP" when the loading door switch is open and "doorCL" when the loading door switch is closed.

The loading door switch has to be closed or open for at least one second for the control to register the switch as closed or open.

To exit the Loading Door Test, press the Back (←) keypad. The control will return to the testing mode.

Lint Door Test "dLint"

This option tests the lint door switch. To start test, control must be in the Testing Mode. Refer to *"How to Enter Testing Feature"* at the beginning of this section.

To enter, press the Start (◇/↵) keypad. The display will show "L intOP" when the lint door switch is open and "LintCL" when the lint door switch is closed.

The lint door switch has to be closed or open for at least one second for the control to register the switch as closed or open.

NOTE: Loading door must be closed while testing lint door.

To exit the Lint Door Test, press the Back (←) keypad. The control will return to the testing mode.

Heater Interlock Test "dHEAt"

While this test is running, the control will show the status of the following inputs for two seconds each. The control will continue scrolling through the input status displays until the test is aborted.

To start test, the control must be in the Testing Mode. Refer to *"How to Enter Testing Feature"* at the beginning of this section.

To enter, press Start (◇/↵). Refer to five sections below for more details on individual statuses.

NOTE: These switches are tested in sequence. If one switch is sensed open, the rest will be open as well. For example, if the fan motor contactor switch is open, all of the switches will be open.

To exit the test, press the Back (←) keypad. The control will return to the testing mode.

Fan Motor Contactor Switch "FCOnHH"

The display will show "FCOnOP" if the switch is sensed open and "FCOnCL" if the switch is sensed closed.

Fan Motor Centrifugal Switch "FnCSHH"

The display will show "FnCSOP" if the switch is sensed open and "FnCSCL" if the switch is sensed closed.

Cabinet High Limit Thermostat "CAb HH"

The display will show "CAb OP" if sensed open for at least 1.5 seconds and "CAb CL" if sensed closed for at least one second.

Stove High Limit Thermostat 1 "SL HH"

The display will show "SL OP" if sensed open for at least 1.5 seconds and "SL CL" if sensed closed for at least one second.

Stove High Limit Thermostat 2 "SL2 HH"

The display will show "SL2 OP" if sensed open for at least 1.5 seconds and "SL2 CL" if sensed closed for at least one second.

Dip Switch Status "ddiP"

The control will show the displays in *Table 3* according to the DIP switch configuration. The control will show which switches are in the ON position. For example, to verify that DS3, DS5 and DS7 are in the ON position, the display will show "dSC084" (DS3=4, DS5=16 and DS7 = 64, 4+16+64 =84).

DS8	DS7	DS6	DS5	DS4	DS3	DS2	DS1	Display
OFF	OFF	OFF	OFF	OFF	OFF	OFF	OFF	dSC000
OFF	OFF	OFF	OFF	OFF	OFF	OFF	**ON**	dSC001
OFF	OFF	OFF	OFF	OFF	OFF	**ON**	OFF	dSC002
OFF	OFF	OFF	OFF	OFF	**ON**	OFF	OFF	dSC004
OFF	OFF	OFF	OFF	**ON**	OFF	OFF	OFF	dSC008
OFF	OFF	OFF	**ON**	OFF	OFF	OFF	OFF	dSC016
OFF	OFF	**ON**	OFF	OFF	OFF	OFF	OFF	dSC032
OFF	**ON**	OFF	OFF	OFF	OFF	OFF	OFF	dSC064
ON	OFF	OFF	OFF	OFF	OFF	OFF	OFF	dSC128

Table 3

ICM Alarm Status "diCnAL"

This option shows the status of the ICM (Ignition Control Module) Alarm.

To start test, control must be in the Testing Mode. Refer to *"How to Enter Testing Feature"* at the beginning of this section.

To enter, press the Start (◇/↵) keypad. The display will show " iAL on" if the alarm is active for at least one second or " iALOFF" if the alarm is not active for one second.

To exit the test, press the Back (←) keypad. The control will return to the testing mode.

ICM Reset Test "diCnrS"

The ICM Reset Test can be used to both activate the ICM alarm signal and reset the ICM alarm. When this test is started, the ICM reset will become active. If the reset signal is active for a long enough period of time (4 seconds) the ICM Lockout input will become active. To reset the ICM, stop the ICM Reset Test and then start the test again until the ICM Lockout input becomes inactive (4 seconds) and then stop the ICM Reset Test. If " irESEt" shows on the display, ICM Reset output is active.

External Alarm Test "dEALrn"

This option tests whether the external alarm is working.

To start test, control must be in the Testing Mode. Refer to *"How to Enter Testing Feature"* at the beginning of this section.

To enter, press the Start (◇/↵) keypad. The display will show "EALArn" and the external alarm will sound until the test is exited.

To exit this test, press the Back (←) keypad. The control will return to the testing mode.

Tumble Dryer On Temperature Test "ddryon"

This option tests the temperature inside the cylinder while running a cycle.

To start test, control must be in the Testing Mode. Refer to *"How to Enter Testing Feature"* at the beginning of this section.

To enter, press the Start (◇/↵) keypad. The display will show "P HHHF" (Fahrenheit) or "P HHHC" (Celsius). Use the Up (↑) or the Down (↓) keypad to select desired temperature. Press the Start (◇/↵) keypad to begin cycle. While the test is running the control will display the temperature estimated in the cylinder ("HHH F " or "HHH C "). Once the cylinder temperature stabilizes at the target temperature, the heater is turned off and there is a two minute cool down period. During cool down, the control will display the time remaining as " nn SS".

NOTE: This test does not increment the Total # of Cycles audit counter.

To exit the test, press the Back (←) keypad. The control will return to the testing mode.

Thermistor Temperature Test "dtHEr"

This option displays the temperature sensed at the thermistor in 5°F (3°C) increments.

To start test, control must be in the Testing Mode. Refer to *"How to Enter Testing Feature"* at the beginning of this section.

To enter, press the Start (◇/↵) keypad. The display will show " HHHF" or " HHHC". The "F" will show Fahrenheit, the "C" will show Celsius and the "HHH" will show degrees. If control senses a shorted thermistor, the display will show " SH ". If the control senses an open thermistor, the display will show " OP ".

To exit this test, press the Back (←) keypad. The control will return to the testing mode.

Machine Configuration Display #2 Test "dConF2"

This option shows the machine configuration values for the machine type.

To start test, control must be in the Testing Mode. Refer to *"How to Enter Testing Feature"* at the beginning of this section.

To enter, press the Start (◇/↵) keypad. The display will show "C HHH", with "HHH" the number corresponding to the machine capacity. Refer to *Table 4*.

Value	Description
2	25, 30 Pound Tumble Dryer
4	30, 45 Pound Stack Tumble Dryer
5	35, 55 Pound Tumble Dryer
12	50, 75, F75, 120, 170, 200 Pound Tumble Dryer

Table 4

To exit Machine Configuration Display #2 Test, press the Back (←) keypad. The control will return to the testing mode.

Machine Configuration Display #3 Test"dConF3"

This option shows the machine configuration values for the machine capacity.

To start test, control must be in the Testing Mode. Refer to *"How to Enter Testing Feature"* at the beginning of this section.

To enter, press the Start (◇/↵) keypad. The display will show "d HHH", with "HHH" representing the machine capacity. Refer to *Table 5*.

To exit Machine Configuration Display #3 Test, press the Back (←) keypad. The control will return to the testing mode.

Value	Description
0	Tumble Dryer
17	25 Pound Tumble Dryer
18	30 Pound Tumble Dryer
19	30 Pound Stack Tumble Dryer
20	30 Pound Stack Tumble Dryer – Lower Pocket
21	30 Pound Stack Tumble Dryer – Upper Pocket
22	35 Pound Tumble Dryer
23	45 Pound Stack Tumble Dryer
24	45 Pound Stack Tumble Dryer – Lower Pocket
25	45 Pound Stack Tumble Dryer – Upper Pocket
26	50 Pound Tumble Dryer
27	55 Pound Tumble Dryer
28	75, F75 Pound Tumble Dryer
29	120 Pound Tumble Dryer
30	170 Pound Tumble Dryer
31	200 Pound Tumble Dryer

Table 5

Airflow Switch Test "dAFS"

This option shows the current state of the airflow switch.

To start test, control must be in the Testing Mode. Refer to *"How to Enter Testing Feature"* at the beginning of this section.

To enter, press the Start (◇/↵) keypad. The display will show "AF OP" or "AF CL", with "AF OP" being open and "AF CL" being closed.

Switch has to be closed for at least one second or open for at least one second for a valid change.

To exit Airflow Switch Test, press the Back (←) keypad. The control will return to the testing mode.

Fan Motor Test "dFAn"

This option shows the fan motor running.

To start test, control must be in the Testing Mode. Refer to *"How to Enter Testing Feature"* at the beginning of this section.

To enter, press the Start (◇/↵) keypad. The display will show "FAn " to indicate the fan motor is going to run.

The test must run for at least six seconds before it can be exited and off for six seconds before the test can be run again.

NOTE: This test does not count towards the total machine run time operation.

To exit Fan Motor Test, press the Back (←) keypad. The control will return to the testing mode.

Damper Motor Test "ddAnPr"

This option shows the damper motor running.

To start test, control must be in the Testing Mode. Refer to *"How to Enter Testing Feature"* at the beginning of this section.

To enter, press the Start (◇/↵) keypad. The display will show "dAnPEr" to indicate the damper motor is going to run.

The test must run for at least six seconds before it can be exited and off for six seconds before the test can be run again.

NOTE: This test does not count towards the total machine run time operation.

To exit Damper Motor Test, press the Back (←) keypad. The control will return to the testing mode.

Reverse Motor Test "drEUSE"

This option shows the reverse motor running.

To start test, control must be in the Testing Mode. Refer to *"How to Enter Testing Feature"* at the beginning of this section.

To enter, press the Start (◇/↵) keypad. The display will show "rnotor" to indicate the reverse motor is going to run.

The test must run for at least six seconds before it can be exited and off for six seconds before the test can be run again.

NOTE: This test does not count towards the total machine run time operation.

To exit Reverse Motor Test, press the Back (←) keypad. The control will return to the testing mode.

Rotation Sensor Test "drotAt"

This option shows the RPM of the tumble dryer cylinder.

To start test, control must be in the Testing Mode. Refer to "*How to Enter Testing Feature*" at the beginning of this section.

To enter, press the Start keypad. The display will show "rPnHHH". The display is updated every ten seconds. The test must run for at least six seconds before it can be exited and off for six seconds before the test can be run again.

NOTE: This test does not count towards the total machine run time operation.

To exit Rotation Sensor Test, press the Back (←) keypad. The control will return to the testing mode.

Moisture Sensor Test (Shorted Test Jumper) "drnC 1"

This step is skipped if the control is not configured for Moisture Sensing. When entering this test, the control will show "rnC 1" while flashing the Start LED one second on/one second off, allowing the user to short the cylinder to the baffle (orange jumper). When the Start key is pressed, this test step energizes the Fan Motor Contactor and Forward Motor Contactor and the control will show " HH". The moisture sensor test is 30 seconds. During this 30 second period, the control is continually monitoring the moisture sensor input for the expected short circuit. If an intermittent signal or high resistance is sensed before the 30 seconds expire, the test is terminated and the control will show "OPEn ", indicating that the test has failed. At this time the user has the option to press the Back (←) keypad to return and run the test again. If the control ran the whole test reading the expected moisture sensor level and without an intermittent signal or high resistance, "PASS " will be shown. If either the loading or lint doors are opened during the test, the control will reset the test step and allow it to be run again. When the test is complete and result is displayed, the control sounds a 5 second audio signal. Press a key to advance to the next test step. If the Up (↑) or Down (↓) keypad is pressed while the test is in progress the control will toggle between displays " HH", "rnC HH" and "SnrHHH". If the display is left on "rnC HH" or "SnrHHH" for 5 seconds the control will revert to showing "rnC 1".

Moisture Sensor Test (Resistance Test Jumper) "drnC 2"

This step is skipped if the control is not configured for Moisture Sensing. When entering this test, the control will show "rnC 2" while flashing the Start key LED one second on/one second off, allowing the user to place the 510k Ohm resistor between the cylinder and the baffle (black jumper) which simulates an expected moisture sensor level. When the Start keypad is pressed, this step energizes the Fan Motor Contactor and Forward Motor Contactor and the control will show " HH". The moisture sensor test is 30 seconds. During this 30 second period, the control is continually monitoring the moisture sensor input for the expected moisture sensor level. If an intermittent signal or unexpected resistance is sensed before the time expires, the test is terminated and the control will show "OPEn ", indicating that the test has failed. At this time, the user has the option to press the Back (←) keypad to return and run the test again. If the control ran the test reading the expected moisture sensor level and without an inttermittent signal or unexpected resistance, "PASS " will be shown. If either the loading or lint doors are opened during the test, the control will reset the test step and allow it to be run again. When the test is complete and result is displayed, the control sounds a 5 second audio signal. Press a key to advance to the next test step. If the Up (↑) or Down (↓) keypad is pressed while the test is in progress the control will toggle between " HH", "rnC HH" and "SnrHHH". If the display is left on "rnC HH" or "SnrHHH" for 5 seconds the control will revert to showing "rnC 2".

Production Test Cycle

To Enter Production Test Cycle

1. Be certain control is in Idle Mode.
2. While pressing and holding the Down (↓) keypad with one hand, press the Back (←) keypad with the other hand.
3. When the control enters the Production Test Cycle, it will first display "S HH" with the "HH" showing the software version of the control.
4. The control will advance through the sequence of test steps whenever any keypad is pressed, with the exception of the Keypad Test. Refer to *Table 6* for all tests in the Production Test Cycle.

To Exit Production Test Cycle

The test will be exited when the time reaches "00" on the control in the 10 Minute Test Cycle. Otherwise, the control must be powered down to end the test.

Production Test Cycle Quick Reference Table		
Display	**Test Mode**	**Comments**
"S HH"	Software Version	HH is the software version number.
"Ct HHH"	Control Type	2, 3, 4, 5 or 6, depending on brand.
"PAd "	Keypad Test	When a key is pressed, the control will display the number assigned to the keypad. As each keypad is pressed, the control will display the number assigned to it in the last digit of the display until the next key is pressed (example, if Key 1 is pressed the control will show "PAd 1"). When all keypads have been pressed, the control will advance to next step after a one second delay.
"doorOP" or "doorCL"	Loading Door Test	The control will display the status of the loading door: "doorOP" if door is open or "doorCL" if door is closed.
"L intOP" or "L intCL"	Lint Door Test	The control will display the status of the lint door: "L intOP" if door is open or "L intCL" if door is closed. Loading door must be closed.
All LEDs and display segments will light	Show Entire Display Mode	The audio signal is turned off. Control will stay in this mode until any key is pressed.
"C HH"	Machine Configuration #2 Display	HH is the configuration byte value. The control will remain in this mode until any key is pressed.
"dSCHHH"	DIP Switch Configuration	The control will show the sum of all switches in the On position. The control will remain in this mode until any key is pressed.
Degrees in 5°F (3°C) increments, " SH ", " OP "	Thermistor Temperature Test	The temperature will be displayed in either Fahrenheit or Celsius, depending on machine's configuration (refer to ***Programming Control***). If control senses a shorted thermistor, SH will be displayed. If control senses an open thermistor, OP will be displayed.
–	Moisture Sensor 1 Test (Shorted)	Refer to ***Diagnostic Test Descriptions***. Test step lasts for 15 seconds.
–	Moisture Sensor 2 Test (Resistance)	Refer to ***Diagnostic Test Descriptions***. Test step lasts for 15 seconds.
" nn SS"	10 Minute Test Cycle	Determines if tumble dryer can function in a cycle for 10 minutes. Start pad will flash one second on and one second off. The Start pad can be used to decrease time remaining. If Start pad is not pressed within 4.25 minutes, the control will return to Idle Mode.

NOTE: If power to the control is turned off before 10 Minute Test Cycle has ended, the cycle will be cleared from control.

Table 6

64. Diagnostic Testing
Models with RU Control Suffix

Diagnostic Menu

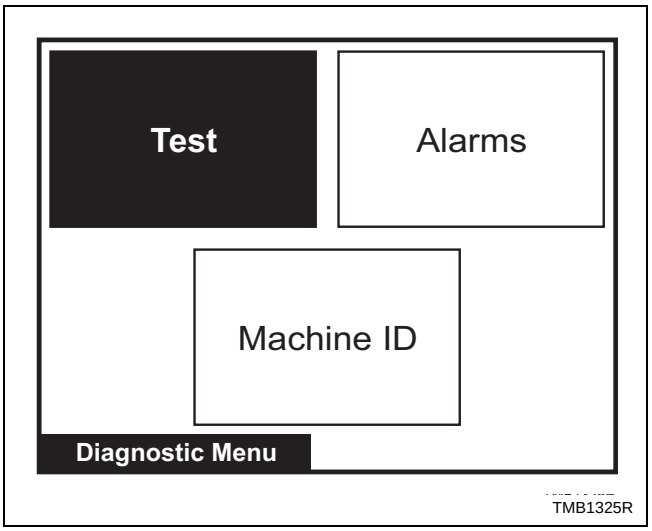

Figure 14

The Diagnostic Menu contains Test, Alarm and Machine ID Menus. The menus contain specific diagnostic information and manufacturing data for the machine. The ← , → , LCD ↑ and ↓ keypads position the highlighted box. Press the START ENTER keypad to select the menu choice.

Press the BACK keypad while in the Diagnostic Menu to return to System Menu.

Test Menu

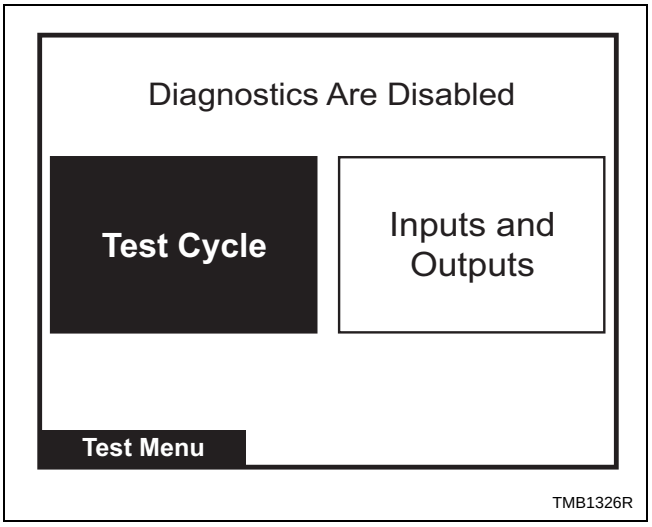

Figure 15

The Test Menu provides features for manufacturing and customer service testing. The highlighted box is moved horizontally and vertically using the ← → LCD ↑ and ↓ keypads. Press the START ENTER keypad to select the menu choice.

Press the BACK keypad to return to Diagnostic Menu.

The screen will display “Diagnostics Are Disabled” if the manual diagnostics have been programmed off. Diagnostic test commands via PDA and network will still function.

Test Cycle Menu

The Test Cycle Menu is used to run several test steps as well as a ten-minute cycle. Step 01 keypad test requires the user to press each keypad. Step 02 Door Status shows whether the loading and lint doors are open or closed. Press any key to advance. Step 03 Screen Test shows four screens that test the LCD screen. Press any key to advance through each of the four test steps.

The Test Cycle Menu for Test Steps 4-13 is shown in *Figure 16*.

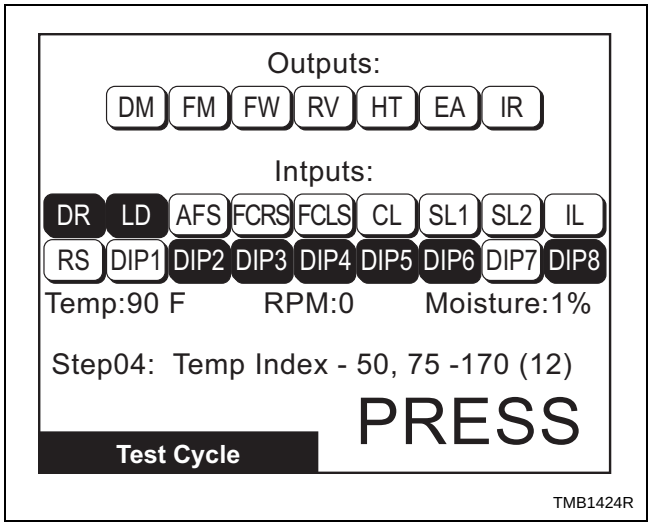

Figure 16

It is similar to the Inputs/Outputs Menu except that the test step is shown at the bottom of the display and a key press prompt message is shown in the lower right corner. Press START ENTER to advance through the steps. Refer to *Table 7* for more details of each step. Press STOP ON/OFF to terminate the test.

Test Cycle Chart

STEP	Test Cycle Step	Display Description	STEP ADVANCE	COMMENTS
1	Keypad Test Step	“Press Each Key To Advance”	Advance after all keypads are pressed.	
2	Loading and Lint Door Test Step	“Door Status”	Press any keypad.	
3	Display Test Step	“Press Any Key To Advance Through Screen Test”	Press any keypad.	
	Display Test Step #1	Screen is blank	Press any keypad.	
	Display Test Step #2	Horizontal Bars	Press any keypad.	
	Display Test Step #3	Horizontal Bars (inverted)	Press any keypad.	
	Display Test Step #4	Screen is black	Press any keypad.	
4	Machine Temperature Index Display Test	Temperature index harness value	Press START ENTER keypad.	
5	Machine Capacity	Capacity size of machine	Press START ENTER keypad.	DIP switch status will be shown.
6	Heat Source	Type of heat machine is configured for	Press START ENTER keypad.	DIP switch status will be shown.
7	Reversing Motor Present	Will show if machine is equipped for reversing	Press START ENTER keypad.	DIP switch status will be shown.
8	Rotation Sensor Present	Will show if machine is equipped for rotation sensor	Press START ENTER keypad.	DIP switch status will be shown.
9	Moisture Sensor Present	Will show if machine is equipped for moisture sensor	Press START ENTER keypad.	DIP switch status will be shown.
10	Moisture Sensor Test #1	Runs test for short in moisture sensor circuit	Press any keypad.	Press BACK to restart test. This step will be skipped if machine is not equipped for moisture sensor.
11	Moisture Sensor Test #2	Runs test for resistance to expected moisture level	Press any keypad.	Press BACK to restart test. This step will be skipped if machine is not equipped for moisture sensor.
12	Ten Minute Cycle	Runs a ten-minute normal cycle	Press START ENTER keypad.	Any errors encountered are displayed.
13	Audio Signal Test	Audio signal sounds for five seconds	Automatically.	

Table 7

Inputs Outputs Menu

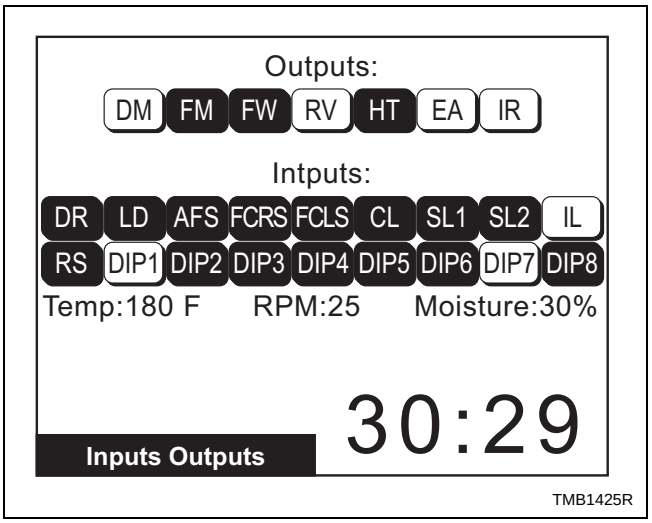

Figure 17

When the Inputs Outputs Menu is accessed through the Diagnostic Menu, the user can manually turn on outputs. The user can scroll through the outputs using any of the arrow keys, the cursor is indicated by flashing the active output on the screen. The user must "setup" the outputs to be turned on. The STOP ON/OFF keypad is used to select individual outputs to be turned on or off. After the START ENTER keypad is pressed the control will turn the selected outputs on and display the text "RUNNING". The outputs cannot be selected until the STOP ON/OFF keypad is pressed. The text "RUNNING" is no longer displayed. The screen will still show the selected outputs on the screen and the user can again select outputs to be turned on or off. If the BACK or STOP ON/OFF keypad is pressed at any time during this test, the control will turn off all outputs if the test is running or return to the previous screen if the test is not running.

If the Inputs Outputs Menu is accessed through the Run Diagnostic Menu (pressing the → keypad during a running cycle) the menu shows only what is turned on and off as the cycle runs. Refer to *Figure 17*.

Abbreviations for the Inputs and Outputs are defined in the following table:

Inputs	
DR	Loading Door
LD	Lint Door
AFS	Airflow Switch
FCRS	Fan Motor Contactor Switch
FCLS	Fan Motor Centrifugal Switch
CL	Cabinet High Limit
SL1	Store 1 High Limit
SL2	Store 2 High Limit
IL	Ignition Lockout
RS	Rotation Sensed
DIP1	Dip Switch 1
DIP2	Dip Switch 2
DIP3	Dip Switch 3
DIP4	Dip Switch 4
DIP5	Dip Switch 5
DIP6	Dip Switch 6
DIP7	Dip Switch 7
DIP8	Dip Switch 8
Temp	Temperature
RPM	Rotations per Minute
Moisture	Moisture Level
Outputs	
DM	Damper Motor
FM	Fan Motor
FW	Forward Contactor
RV	Reverse Contactor
HT	Heater
EA	External Alarm
IR	Ignition Reset

Table 8

Alarms Menus

ALARM COUNTS

C01: S02 Cabinet High Limit	12/05 03:34
C02: S05 Heat	11/29 15:55
C38: S01 Fan Motor Contactor	08/14 07:27
C07: S04 Open Thermistor	06/28 18:24
C01: Scd Open Thermistor	04/08 08:05

Alarms (1 of 3)

TMB1400R

Figure 18

ALARM COUNTS

Air Flow Switch 1	Count:	0
Air Flow Switch 2	Count:	0
Air Flow Switch Bounce	Count:	0
Cabinet High Limit	Count:	1
Stove 1 High Limit	Count:	0
Stove 2 High Limit	Count:	0
Open Thermistor	Count:	2
Short Thermistor	Count:	0

Alarms (2 of 3)

TMB1330R

Figure 19

ALARM COUNTS

Fan Motor Contactor	Count:	1
Fan Motor Centrifugal Sw	Count:	0
ICM Lockout Alarm	Count:	1
Heat	Count:	1
Rotation	Count:	0
Moisture Sensor	Count:	0
IR	Count:	5
Network	Count:	18

Alarms (3 of 3)

TMB1363R

Figure 20

The Alarms Menu contains three screens of information. On the first screen, Alarms (1 of 3), the eight most recent alarms will contain Cycle Number, Segment Number, Alarm Type, and the Date/Time of the Alarm.

The second screen, Alarms (2 of 3), alarm counts list 1 through 8. Alarm counts consist of how many times a specific alarm has occurred.

The third screen, Alarms (3 of 3), is a continuation of the alarm counts 9 through 16.

Press the ← or → keypad to navigate to the different screens in the Alarms Menu. Press the ← keypad to go from screen 1 to screen 3. The actual menus are informational only and cannot be navigated. Press the BACK keypad to return to display to Diagnostic Menu or the Run Diagnostic Menu.

Machine ID Menu

Model:	UT030NUOG2K0W01
Serial #:	1107002759
Install Date:	07/01/2011
Machine Type:	30
Control SN:	11410113
Front End SW:	1
Display SW:	1
Node Number:	250

Machine ID

TMB1332R

Figure 21

The Machine ID Menu provides several different types of manufacturing and machine information that can be useful to the user and technician. The Machine ID Menu cannot be navigated. Pressing the BACK keypad will return to Diagnostic Menu or the Run Diagnostic Menu.