180 SECONDS PER STEP

MACHINE FUNCTION
FONCTIONS DE LA MACHINE
FUNCION de la MAQUINA

SUPER WASH	HEAVY EMPORTE / RESISTENTE							EXTRA RINSE				PERMANENT PRESS SYNTHETIQUES / PERMANENTE PRENSA								EXTRA RINSE				DELICATE DELICAT / DELICADO								EXTRA RINSE				HAND WASHABLES OUVIER LAVER / ENTREGUE WASHABLES								EXTRA RINSE			
FILL-AGITATE HI	FILL-AGITATE HI	DRY AGITATE - LO	DRAIN HI	SPIN HI	FILL & AGITATE HI	DRAIN HI	SPRAY SPIN HI	OFF AUTO AGITATE HI	DRAIN HI	SPIN HI	OFF	FILL-AGITATE HI	FILL-AGITATE LO	DRAIN HI	SPRAY SPIN LO	FILL - AGITATE HI	DRAIN HI	SPRAY SPIN LO	OFF AUTO AGITATE HI	DRAIN HI	SPIN LO	OFF	FILL-AGITATE LO	DRAIN HI	SPIN LO	FILL - AGITATE LO	DRAIN HI	SPRAY SPIN LO	OFF AUTO AGITATE LO	DRAIN HI	SPIN LO	OFF	INTERMITTENT AGITATION 5 SEC ON 30 SEC OFF LO	DRAIN HI	SPIN LO	INTERMITTENT AGIT LO	DRAIN HI	SPRAY SPIN LO	OFF AUTO	FILL - INT AGIT LO	DRAIN HI	SPIN LO	OFF

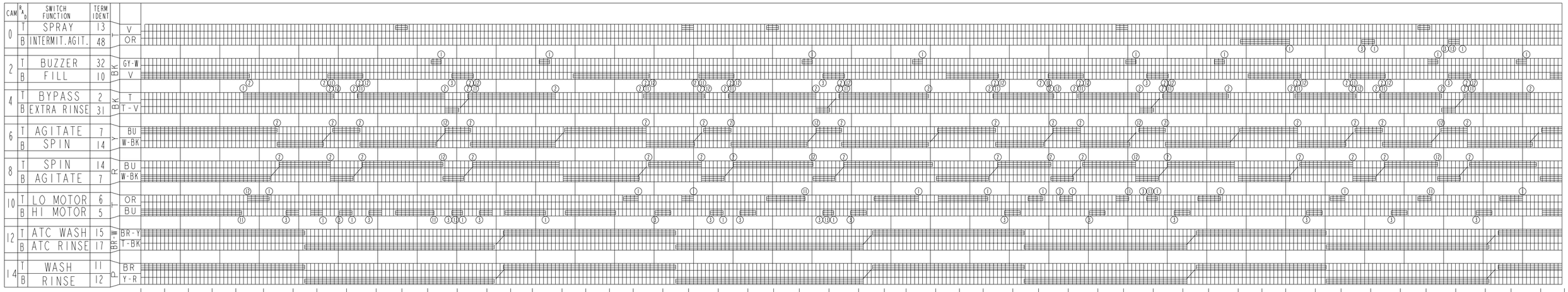

INTERVAL NUMBER	INTERVAL STEP	ACCUMULATED DEGREES
1	6.00°	0.00°
2	6.00°	6.00°
3	6.00°	12.00°
4	6.00°	18.00°
5	7.00°	24.00°
6	7.50°	31.00°
7	6.00°	38.50°
8	7.50°	44.50°
9	7.50°	52.00°
10	6.50°	59.50°
11	6.50°	66.00°
12	7.50°	72.50°
13	7.50°	80.00°
14	6.00°	87.50°
15	5.50°	93.50°
16	7.50°	99.00°
17	6.00°	106.50°
18	6.00°	112.50°
19	6.00°	118.50°
20	7.50°	124.50°
21	6.50°	132.00°
22	7.50°	138.50°
23	7.50°	146.00°
24	6.50°	153.50°
25	6.50°	160.00°
26	7.50°	166.50°
27	7.50°	174.00°
28	6.50°	181.50°
29	5.50°	188.00°
30	7.50°	193.50°
31	6.00°	201.00°
32	6.00°	207.00°
33	7.50°	213.00°
34	6.50°	220.50°
35	7.50°	227.00°
36	7.50°	234.50°
37	6.50°	242.00°
38	7.50°	248.50°
39	7.50°	256.00°
40	6.50°	263.50°
41	7.50°	270.00°
42	6.00°	277.50°
43	6.00°	283.50°
44	7.50°	289.50°
45	6.50°	297.00°
46	7.50°	303.50°
47	7.50°	311.00°
48	6.50°	318.50°
49	7.50°	325.00°
50	7.50°	332.50°
51	6.50°	340.00°
52	7.50°	346.50°
53	6.00°	354.00°
		360.00°

LEGEND	LEGENDE	LEYENDA
OFF	ARRET	DE
SPRAY	GICLAGE	AEROSOL
BYPASS	DERIVATION	PUENTE
FILL	REMPLISSAGE	LLENAN
AGITATE	AGITER	AGITAN
SPIN	ESSORAGE	VUELTA
HI MOTOR	MOTEUR RAPIDE	ALTO MOTOR
LOW MOTOR	MOTEUR BAS	BAJO MOTOR
WARM/COLD	CHAUDE/FROIDE	CALIENTESE/FRIO
WASH	LAVAGE	COLADA
RINSE	RINCAGE	ACLARACION
DRAIN	VIDENT	DRENAN
DRY/AGITATE	SECHER/AGITER	SECO/AGITAN
BUZZER	VIBREUR	ZUMBADOR
INTERMIT .AGIT	AGITER INTERMITTENT	INTERMITENTE AGITA
EXTRA RINSE	RINCAGE DE PLUS	ACLARADO EXTRA
SUPER WASH	LAVAGE FORMIDABLE	SUPER LAVADO

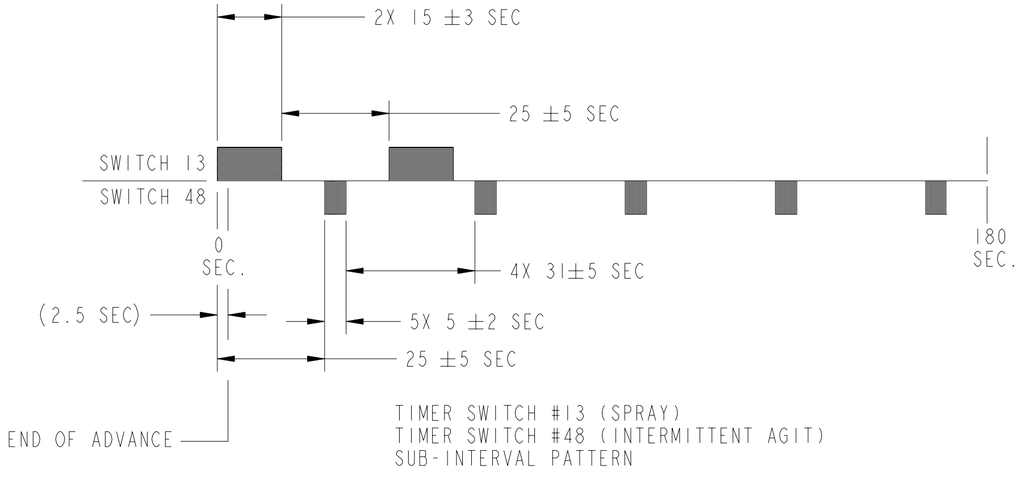

PART No. PIECE N° PIEZA N°	REV. REV. REV.
8564019	A

TIMER KNOB PUSH OFF ALL TIMER SWITCHES OPEN
BOUTON DE LA MINUTERIE ENFONCE (ARRET)-TOUS LES AUTRES COMMUTATEURS DE LA MINUTERIE OUVERTS
PERILLA DEL TEMPORIZADOR OPRIMIDA (APAGADO)-TODOS LOS INTERRUPTORES DEL TEMPORIZADOR ABIERTOS

LEGEND / LEGENDE / LEYENDA

TIMER SWITCH
INT. DU PROGRAMMATEUR
INTERRUPTOR DEL TEMPORIZADOR

INT. COMP CONNECTION
CONNEXION INTERNE DE COMPOSANT
CONEXION INTERNO DEL COMPONENTE

HARNESS WIRING
FAISCEAU DE FILS
CABLEADO DEL HARNESS

HARNESS CONNECTION
CONNEXION DE FILS
CONEXION DEL HARNESS

TERMINAL CONNECTION
CONEXION DE LA BORNE
TERMINAL CONEXION

DRIVE MOTOR / MOTEUR/ IMPULSOR MOTOR

L LOW / LENT / BAJO
M MED / MED / MEDIA
H HIGH / HAUT / ALTO
S START / DEMARRENT / EMPIEZAN

HOT VALVE
SQUPAPE D'EAU CHAUDE
CALIENTE VALVULA

COLD VALVE
SQUAPAPE D'EAU FROIDE
FRIA VALVULA

BUZZER
VIBREUR
ZUMBADOR

BUZZER ON/OFF
VIBEUR SUR/ARRET
ZUMBADOR EN LEJOS

EXTRA RINSE SW SHOWN OFF
RINCADE DE PLUS
ACLARADO EXTRA)

WATER LEVEL SWITCH
INTERRUPTEUR NIVEAU D'EAU
INTERRUPTOR DEL NIVEL DEL AGUA

FULL / PLEIN / POR COMPLETO

EMPTY / VIDE / VACIO

LID SWITCH
INTERRUPTEUR DU COUVERCLE
INTERRUPTOR DE LA TAPA

TIMER MOTOR
MOTEUR DE LA MINUTERIE
MOTOR DEL TEMPORIZADOR

CENTRIFUGAL SWITCH
CONTACTEUR CENTRIFUGE
CENTRIFUGO INTERRUPTOR

CABINET GROUND
TERRE DU CHASSI
CABIN MOLIDA

CAPACITOR /
CONDENSATEUR /
CONDENSADOR

TSC TEMPERATURE SWITCH CHART

DIAGRAME DE COMMUTATEUR
DE LA TEMPERATURE

CARTA DEINTERRUPTOR
DE LA TEMPERATURA

ATC BOARD
CARTE DE CIRCUITS ATC
TARJETA DEL ATC

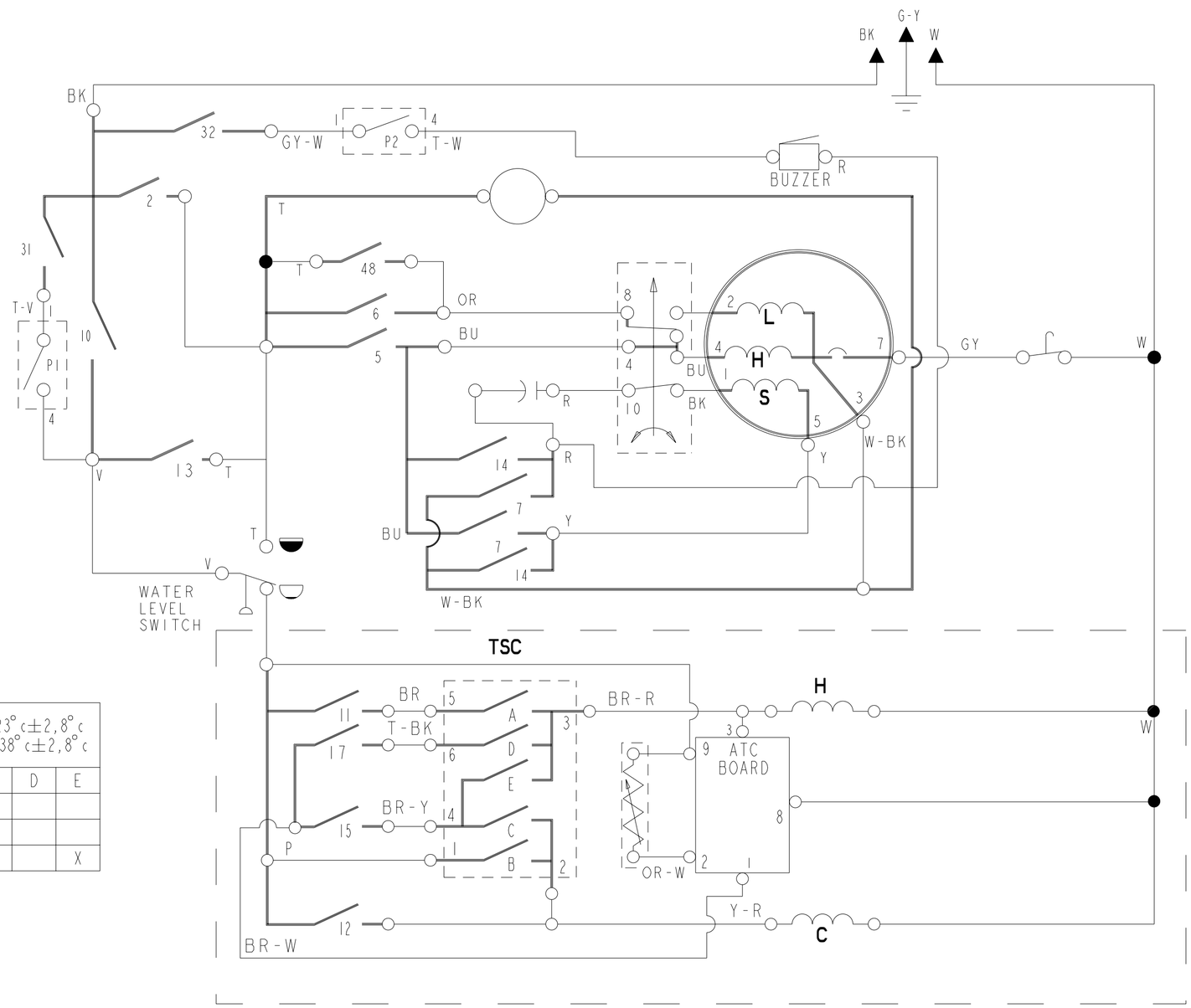

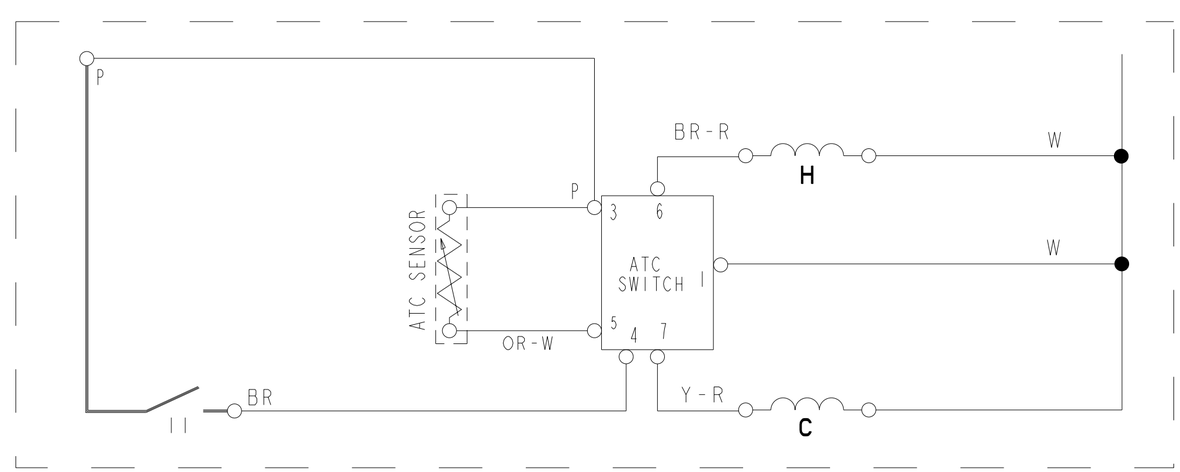

MANUFACTURED UNDER ONE OR MORE OF THE FOLLOWING US PATENTS:
4545947, 4555919, 4566295, 4572596, 4618193, 4624117, 4643350, 4646545, 4656844, 4656847, 4692987, 4693095, 4697293, 4700554, 4709951, 4715401, 4719769, 4754622, 4759202, 4774822, 4779431, 4782544, 4784666, 4785643, 4793820, 4807452, 4809524, 4835991, 4854559, 4856303, 4870988, 4888965, 4890465, 4891959, 4910979, 4945735, 4947516, 4969341, 4972134, 4977394, 4986093, 4987627, 5000016, 5031427, 5033277, 5074003, 5075613, 5113542, 5130624, 5150588, 5154071, 5166568, 5167722, 5172573, 5177659, 5191667, 5191668, 5191669, 5193361, 5199127, 5199281, 5200684, 5205141, 5219370, 5233718, 5249441, 5255844, 5257901, 5259217, 5269160, 5271251, 5297403, 5305485, 5312138, 5314044, 5345637, 5345792, 5345793, 5359744, 5373715, 5460018, 5493745, 5504955, 5507053, 5515565, 5582039, 5582199, 5651278, 5671494, 5765404, 5784902, 5791167, 5836180, 5852942, 5875655, 5878602, 5883490, 5946946, 6065171, 6070282, 6105403, 6115863, 6125490, 6185774, 6212722, 6227013, 6227014, 6269666, 6347645, 6363563, 6393872, 6430971, 6505370, D314263, D375390, D381140, D423740, D426686, D456572, D459844, D463631, D465308

MANUFACTURADO BAJO UNA O MAS DE LAS SIGUIENTES PATENTES MEXICANAS:
159840, 159983, 161744, 163722, 164305, 164407, 165938, 165992, 170221, 174138, 174478, 174483, 177764, 177766, 181185, 182183, 182396, 182632, 187728, 189682, 189766, 192502, 192503, 198393, 199844, 205519, 211042

FABRIQUE SOUS UN OU PLUSIEURS DES BREVETS CANADIENS SUIVANTS:
1228410, 1233039, 1233658, 1282557, 1287338, 1288966, 1298988, 1301469, 1306367, 1313770, 2018975, 2022266, 2043393, 2056969, 2086151, D76618

TSC		* 73°F±5°F=23°c±2,8°c # 100°F±5°F=38°c±2,8°c				
#	WASH / RINSE	A	B	C	D	E
1	CC		X			
2	#WC	X		X		
3	*CC		X			X

TSC		WASH TEMP	RINSE TEMP
POS	WASH / RINSE		
1	C/C	COLD	COLD
2	H/C	100°	COLD
3	W/C	73°	COLD

END OF CYCLE SIGNAL EXTREMITE DE SIGNAL DE CYCLE EXTREMO DE LA SENAL SENAL DEL CICLO	
	P2
OFF ARRET DE	
ON SUR DE	X

EXTRA-RINSE SUPPLEMENTAIRE RINCAGE ADICIONAL ACLARACION	
	P1
OFF/ARRET/DE	
ON / SUR / EN	X