Amana HA2010 19 - PUMP ASSY/BRKT/HOSES & SIPHON BREAK KIT

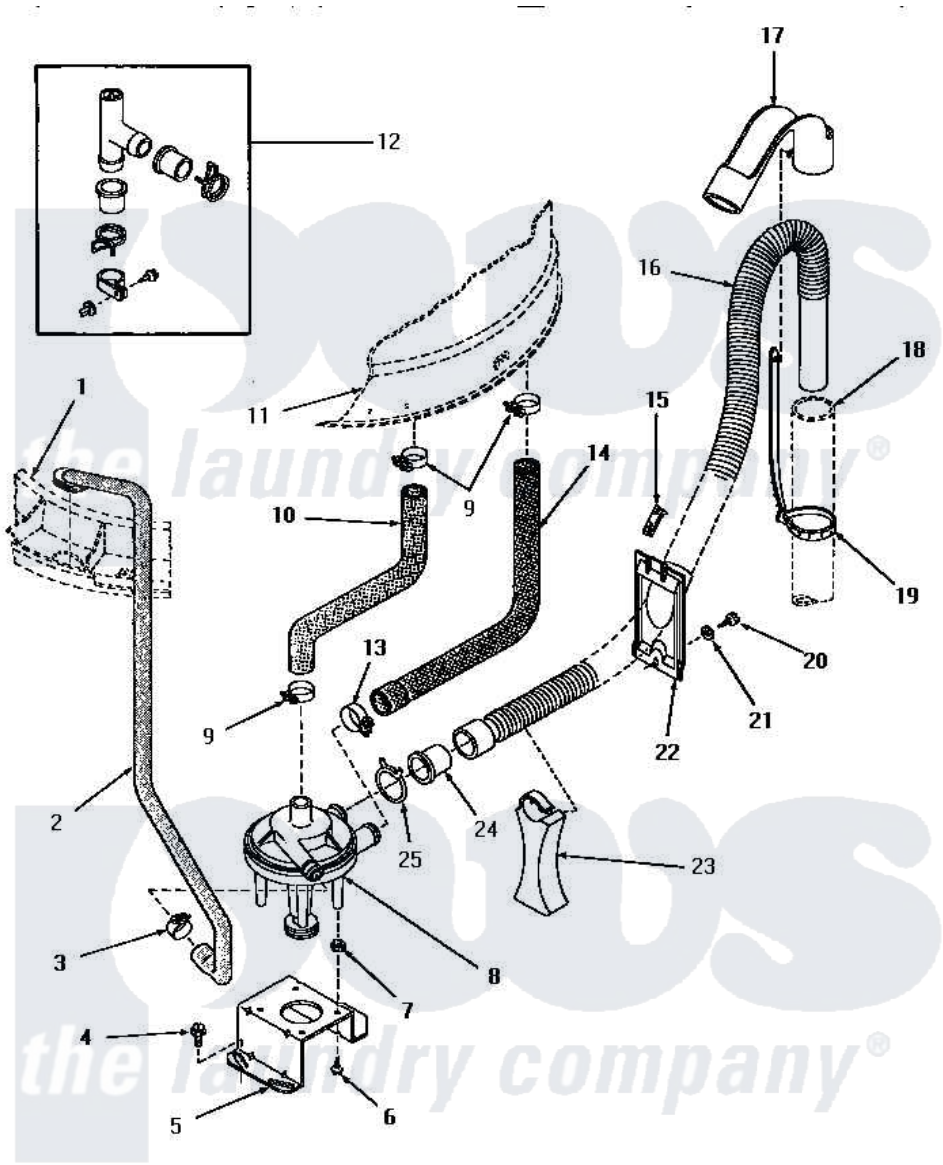

PUMP ASSEMBLY, BRACKET, HOSES AND SIPHON BREAK KIT
(Models equipped with plastic drain hose)

Amana Residential Amana HA2010 Washer Parts Parts Diagram 19 - PUMP ASSY/BRKT/HOSES & SIPHON BREAK KIT

Click on the part number to view part

Item	Original Part Number	Replaced By	Status	Part Description
1	Y00000000		Not Available	SEE NOTE OUTER TUB COVER
2	27232		Not Available	HOSE
3	27644	285655		Clamp, Hose
4	27157			Screw, 10-24 X 5/8 Spec
5	27105			Bracket, Pump Mounting
6	51784		Not Available	SCREW,10B-16 X 1/2 HEX
7	27063			On-Sert
8	27618	31969		Assembly, Pump NA
9	27151	285655		Clamp, Hose
10	27159		Not Available	HOSE,TUB TO PUMP
11	Y00000000		Not Available	SEE NOTE OUTER TUB
12	386P3	76660		Break-Sphn
13	27153	285655		Clamp, Hose
14	27160		Not Available	HOSE,TUB TO PUMP-DRAIN
15	29936		Not Available	HOSE RETAINER CLIP

16	29142	39952		Hose- Drai
17	29144	22003814		Retainer, Drain Hose
18	Y00000000		Not Available	SEE NOTE STANDPIPE
19	29999	8539404		Tie-Wire
20	27196	27001200		Screw
21	20492	M0270504		Washer
22	29131		Not Available	RETAINER,DIRECTIONAL
23	29284			Stand, Hose
24	29143		Not Available	HOSE,ADAPTER
25	29172		Not Available	CLAMP,HOSE
NI	406P3	451P3		Kit Drain Extension

the laundry company®
the laundry company®
the laundry company®