Amana LW3503W2 (BOM: PLW3503W2 B) 08 - FRONT PANEL, BASE ASSY AND CABINET ASSY

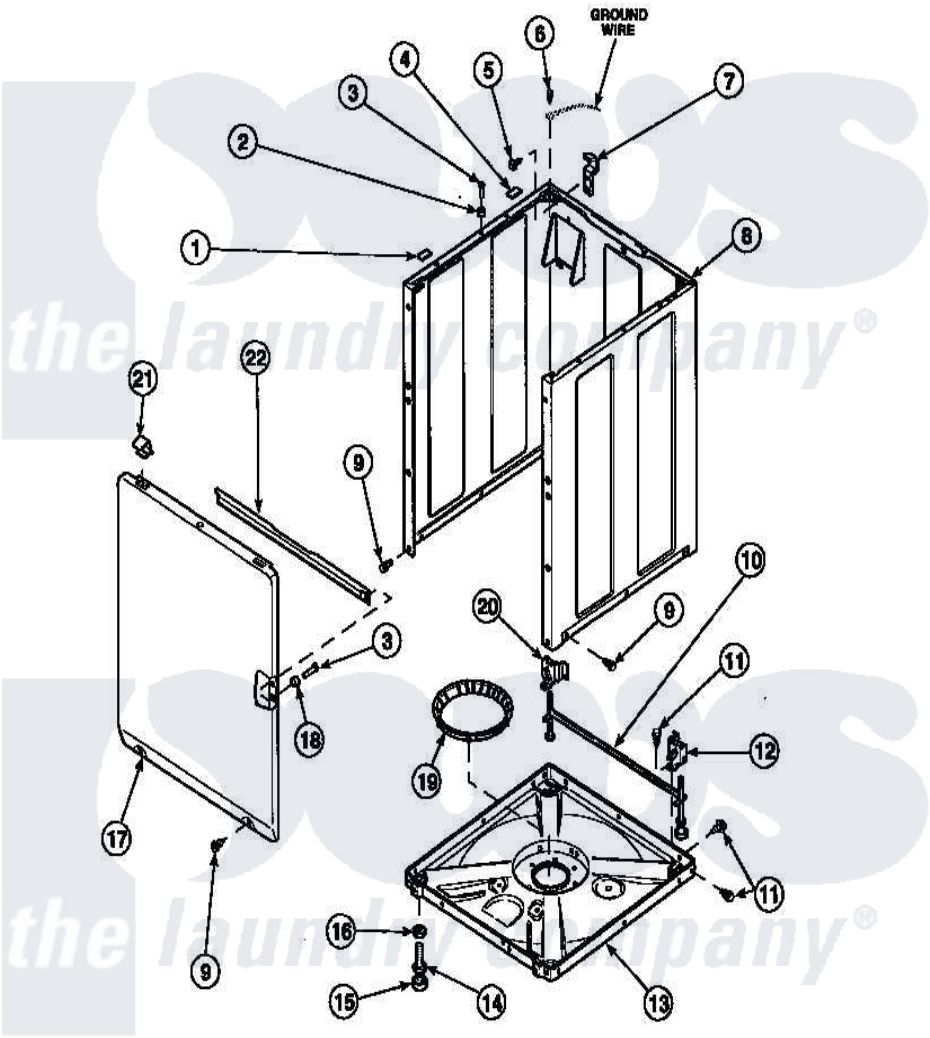

Amana Residential Amana LW3503W2 (BOM: PLW3503W2 B) Washer Parts Parts Diagram 08 - FRONT PANEL, BASE ASSY AND CABINET ASSY
Click on the part number to view part

Item	Original Part Number	Replaced By	Status	Part Description
1	Y56128			Pad, Bumper
2	56079	505187		Locator, Panel
3	32671	Y014874		Screw, Idler Arm And Sleeve
4	36226			Pad, Bumper .25
5	34499		Not Available	SCREW, No.10B X 1/4 TAP IN HX
6	23962	W10116760		Screw
7	Y27103			Hinge, Hold-Down Lug
8	34475P		Not Available	CABINET
9	27196	27001200		Screw
10	34443			Assembly, Leg And Stabilier
11	35148		Not Available	SCREW,1/4-14 X 3/8 HX HD
12	36036		Not Available	BRACKET,SLL-RIGHT
13	36599P			Assembly Nut/ Leg Base
"	34434P			Assembly Nut/Leg Base

14	Y34319	22003428		Leg, Adjustable
15	34318	40016001		Foot, Rubber
16	Y21899	40038101		Nut, Leg
17	34656P		Not Available	NOT GOOD No. SEE NOTE PNL, FRONT
18	28102			Locator, Panel
19	36108		Not Available	SNUBBER PAD & ISOLATOR
20	36037			Bracket, SII-Left
21	35865			Clip, Hold-Down Front Panel
22	Y35097		Not Available	BRACE, FRT PNL

the laundry company®
the laundry company®
the laundry company®