Amana LW6661W2 (BOM: PLW6661W2 B) 01 - 34526P TRANSMISSION ASSY

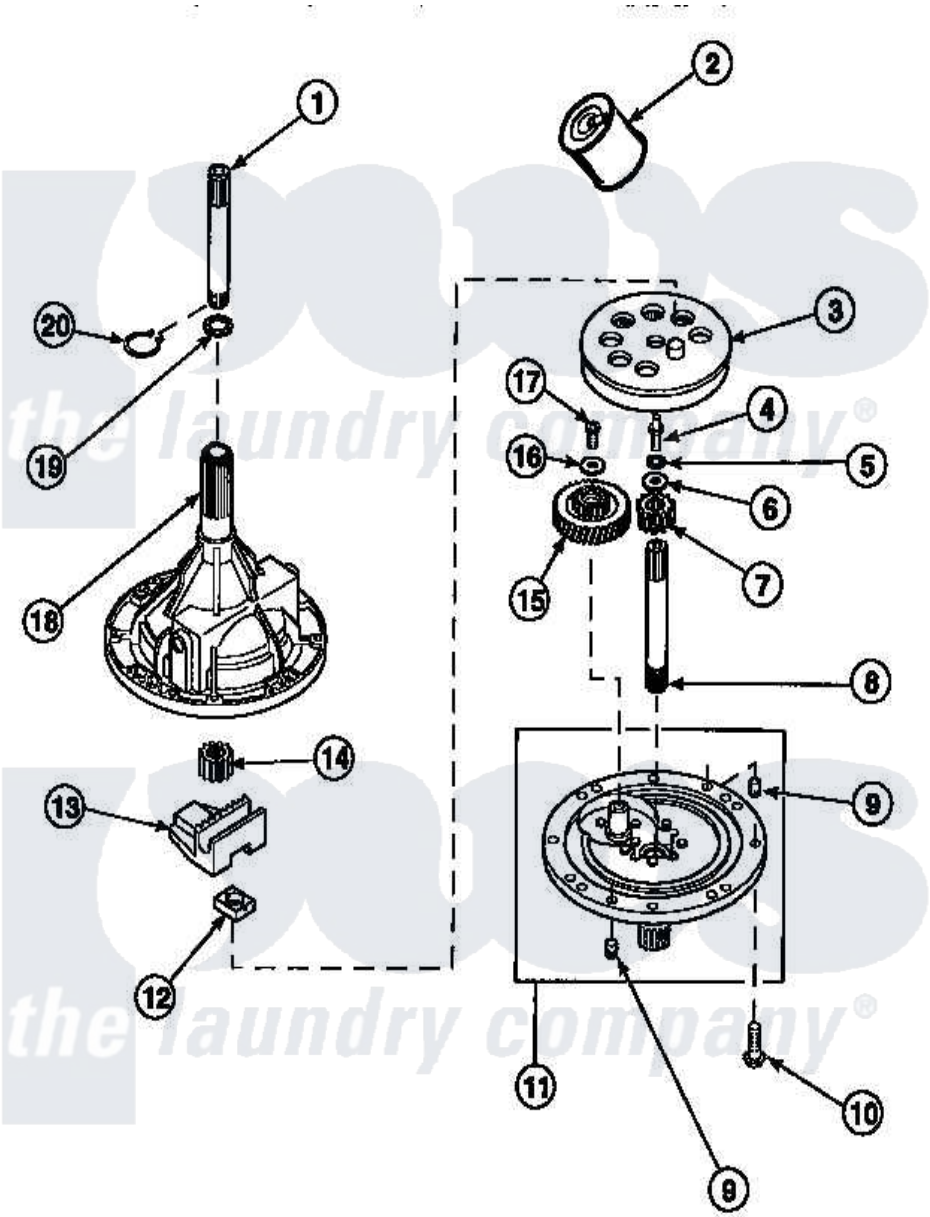

Amana Residential Amana LW6661W2 (BOM: PLW6661W2 B) Washer Parts Parts Diagram 01 - 34526P TRANSMISSION ASSY
Click on the part number to view part

Item	Original Part Number	Replaced By	Status	Part Description
1	Y36570			Shaft, Output
2	27243P			Oil, CW Transmission F-
3	26577			Assembly, Gear And Stud
4	27030		Not Available	SCREW,1/4-20 SPECIAL
5	21456			Lockwasher, 1/4 Intshkp
6	26509	40041501		Washer
7	36562			Pinion, Drive
8	34853			Shaft, Input
9	27172			Pin, Dowel
10	32814		Not Available	SCREW,1/4-20X7/8 SERRA
11	38290			Assembly, Cover
12	26493			Slide
13	Y31526			Rack
14	27003			Pinion, Agitator
15	29161			Gear, Reduction

16	29260	Not Available	WASHER
17	29273		Screw, 1/4-20 X 3/8
18	33223	Not Available	ASSY,TRANSMISSION CASE
19	35092		Washer, 3628id X 1.00 X .056
20	27197		Ring, Retaining
NI	37577P	Not Available	SEALANT

the laundry company®
the laundry company®
the laundry company®