Maytag LAT8404AAE 05 - TOP

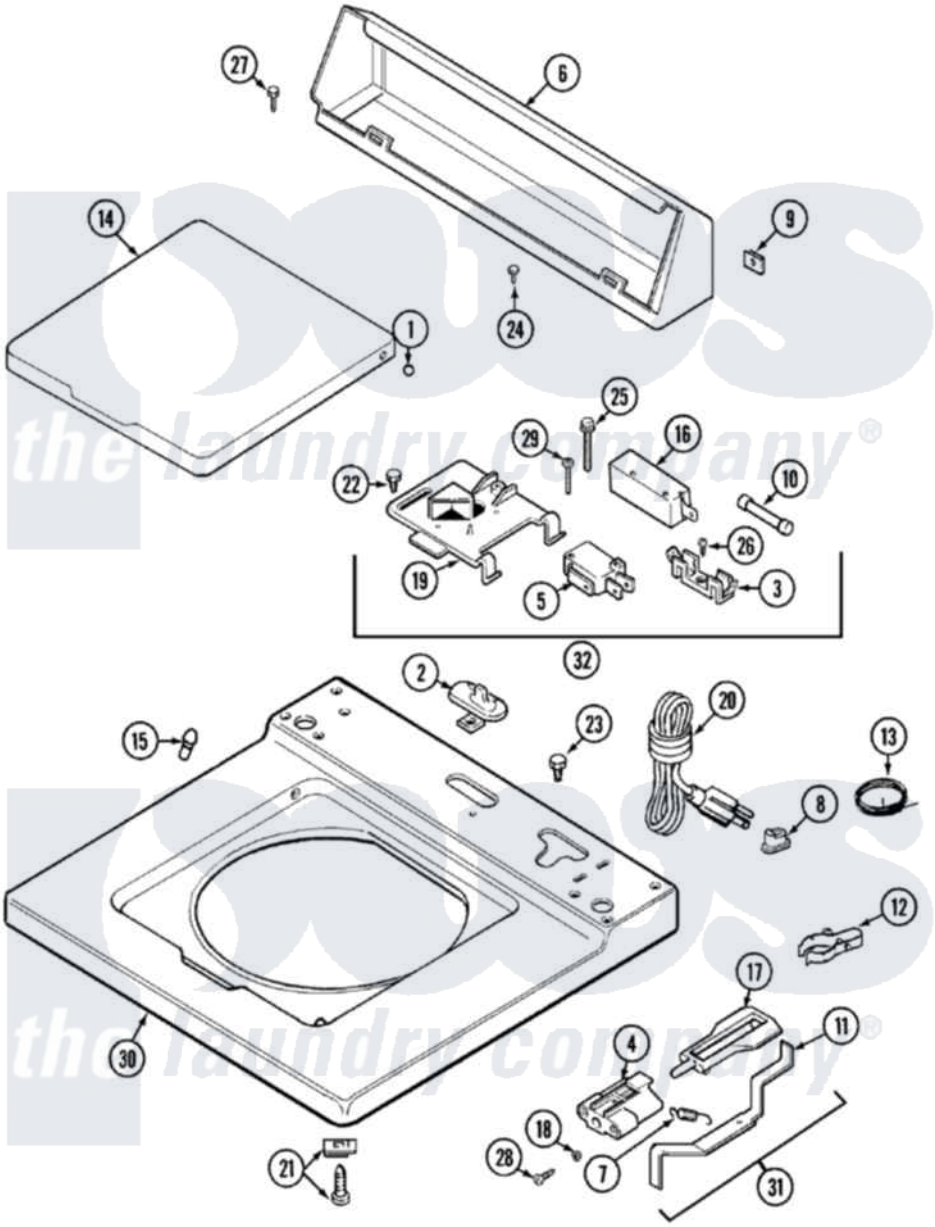

Maytag Residential Maytag LAT8404AAE Washer Parts Parts Diagram 05 - TOP
Click on the part number to view part

Item	Original Part Number	Replaced By	Status	Part Description
1	211726			Hinge, Ball Lid
2	22001298			Cap, Top Cover
"	207159	489355		Screw, 8 X 1/2
3	207167			Block, Fuse
4	216256		Not Available	BRACKET, UNBALANCE
5	207166			Switch, Check
6	205635			Console
7	213720			Spring, Lid Switch
8	211881			Grommet, Cord Part Not Used-Gas Models Only
9	215075			Fastener, Control Panel To Console
10	207168	22001682		Switch Assembly, Lid W/4amp Fuse
11	211726			Hinge, Ball Lid
12	301548			Clamp, Ground Wire
13	204807			Ground Wire, Supp. Plte To Top Cover

14	22001028	22001893		Lid
"	22001206	22001893		Lid
15	212716			Bumper, Lid
16	205415	279347		Switch-Lid
17	216255			Plunger, Lid Switch
18	211500			Washer, Bracket To Top Cover
19	Y215699	22001678		Bracket, Switch And Fuse
20	208194	22003062		Cord, Power
21	204445			Screw And Fastener Assembly
22	207159	489355		Screw, 8 X 1/2
23	315483	3370225		Screw
24	216423	3370225		Screw
25	213501			Screw, No.6-20 X 1-1/8 Inch
26	Y311711			Screw, Fuse Block
27	Y313559			Screw
28	910182	25-7809		Screw, No.6-20 1/2 Flthd Torx
29	22001352			Screw, Check Switch
30	22001117		Not Available	TOP COVER ASSEMBLY (WHT)
31	22001311			Unbalance Lever Assembly
32	207176	22001682		Switch Assembly, Lid W/4amp Fuse

the laundry company®
the laundry company®