Maytag LDG4916AAM 03 - CONTROL PANEL

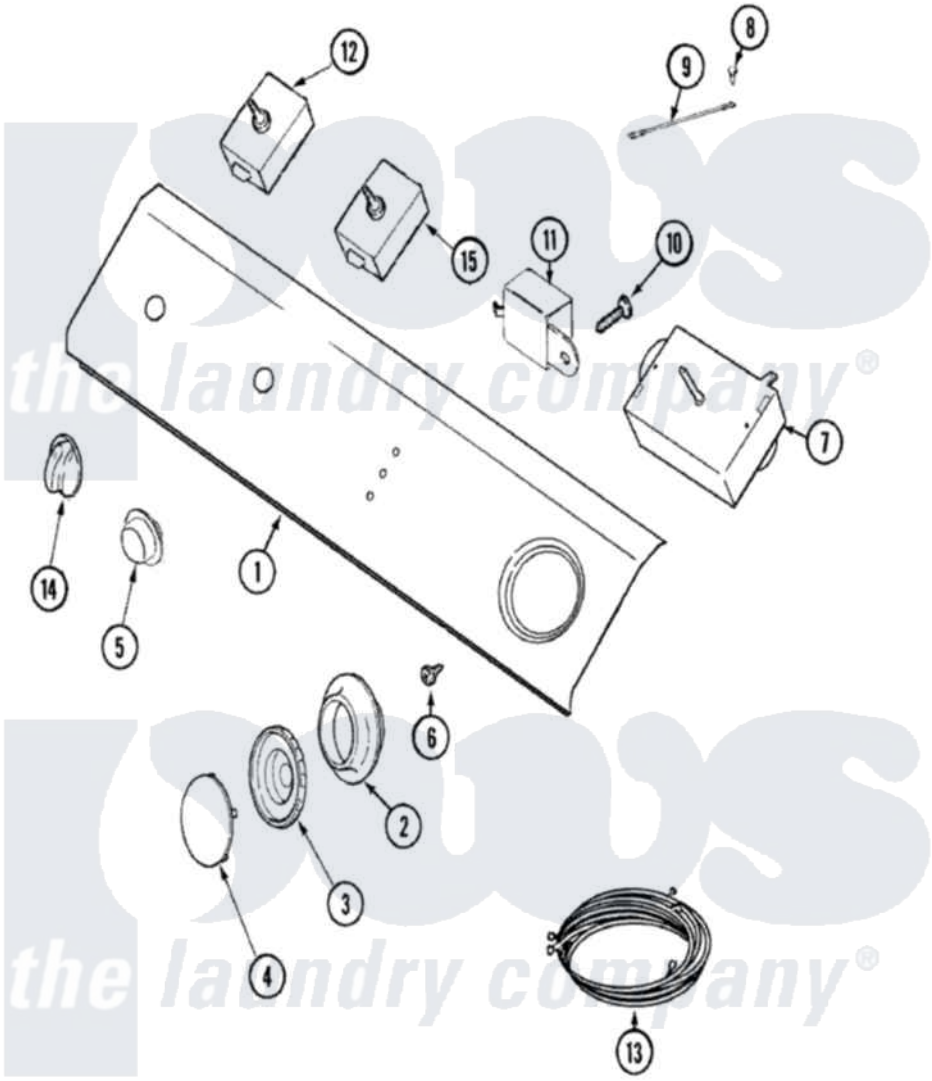

Maytag Residential Maytag LDG4916AAM Dryer Parts Parts Diagram 03 - CONTROL PANEL
Click on the part number to view part

Item	Original Part Number	Replaced By	Status	Part Description
1	33001589		Not Available	PANEL, CONTROL (ALM)
"	22001662	8534058		Screw
2	33001622	33002346		Skirt, Timer Dial
3	22001659			Timer Knob - Grey
4	22001665			Insert, Timer Knob
5	33001620	33002435		Button, Push-To-Start
6	33001690	90767		Screw, 8A X 3/8 HeX Washer Head Tapping
7	33001632			Timer
8	210186	3370225		Screw
9	22001654			Wire, Ground
10	216423	3370225		Screw
11	33001623			Buzzer, Non-Adjustable
12	33001727	33001618		Switch- PU
13	33001670		Not Available	WIRE HARNESS, MAIN
14	22001667	22002589		Knob, Selector
15	33001641			Switch, Temperature

the laundry company®

the laundry company®

the laundry company®