Maytag MAH14PDDWW 05 - DOOR & FRONT PANEL

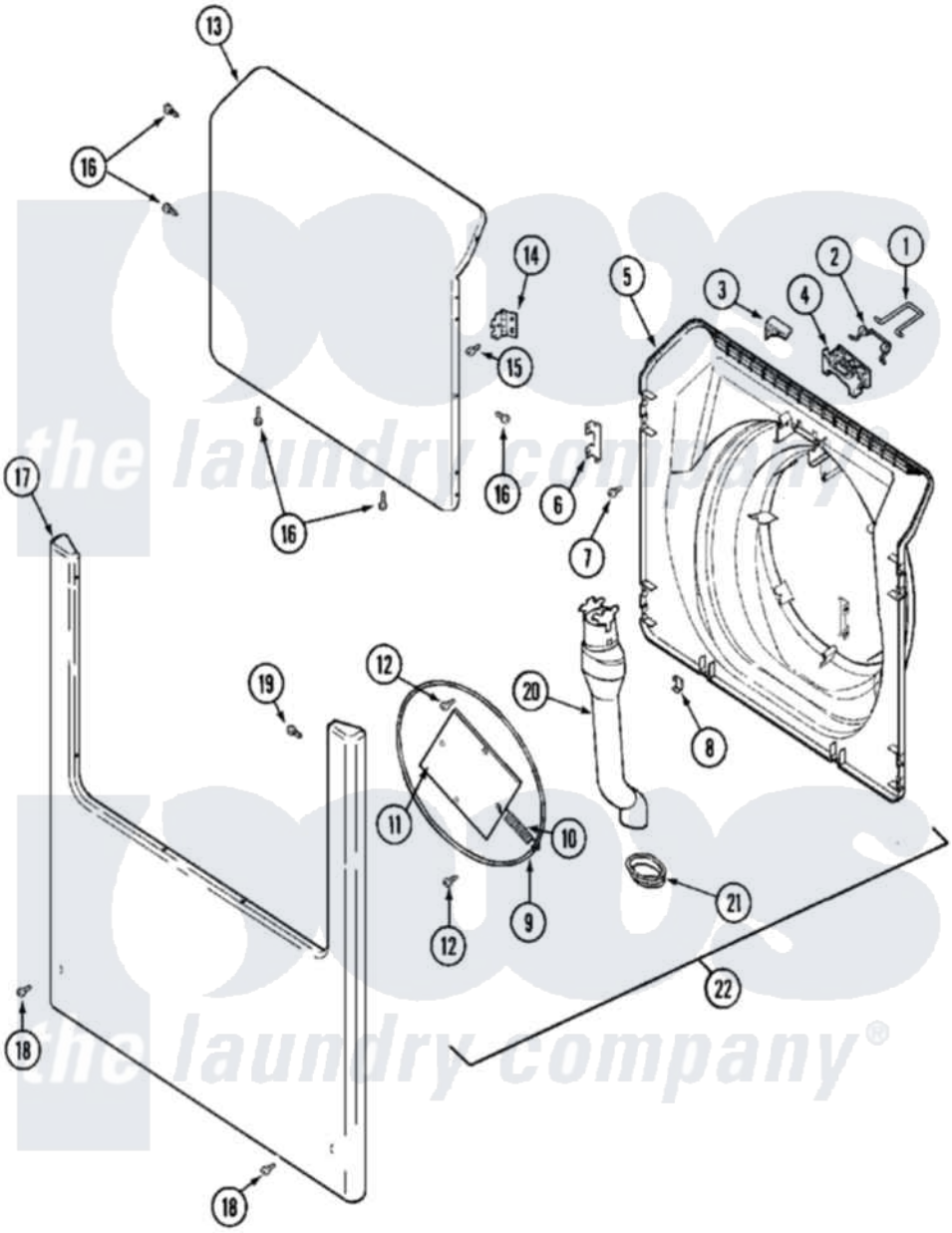

Maytag Residential Maytag MAH14PDDWW Washer Parts Parts Diagram 05 - DOOR & FRONT PANEL
Click on the part number to view part

Item	Original Part Number	Replaced By	Status	Part Description
001	22002002	22003222		Hoop, Lock
002	22002003			Spring, Latch
003	22002243			Screw, Front Panel And Hinge
004	22002168			Support, Lock Hoop
005	22002250	22003611		Kit- Inner
"	22002539	22003083		Liner, Door Assembly W/Vent
"	22003076	22003083		Liner, Door Assembly W/Vent
006	22002038			Clip, Door
007	22002007			Screw, Wire Frame
008	22002039			Clip, Door
009	22002104			Frame, Wire
010	22002356			Spring, Plate
011	22002094			Frame, Wire
012	22002007			Screw, Wire Frame
013	22001979			Door, Outer
014	22002000	22002798		Hinge, Door

015	22002062	98006631	Screw
016	22002063		Screw No.8-18AB Wafer Head
017	22002241	22002836	Panel, Front
018	22001496		Front Panel Fastener And Screw
019	22002244		Clip, Grounding
020	22002990	22003850	Vent Tube Assembly
021	22003075		Grommet, Vent Tube
022	22003083		Liner, Door Assembly W/Vent

the laundry company®
the laundry company®
the laundry company®