Maytag MLE20PDAZW0 02 - DRYER CABINET PARTS

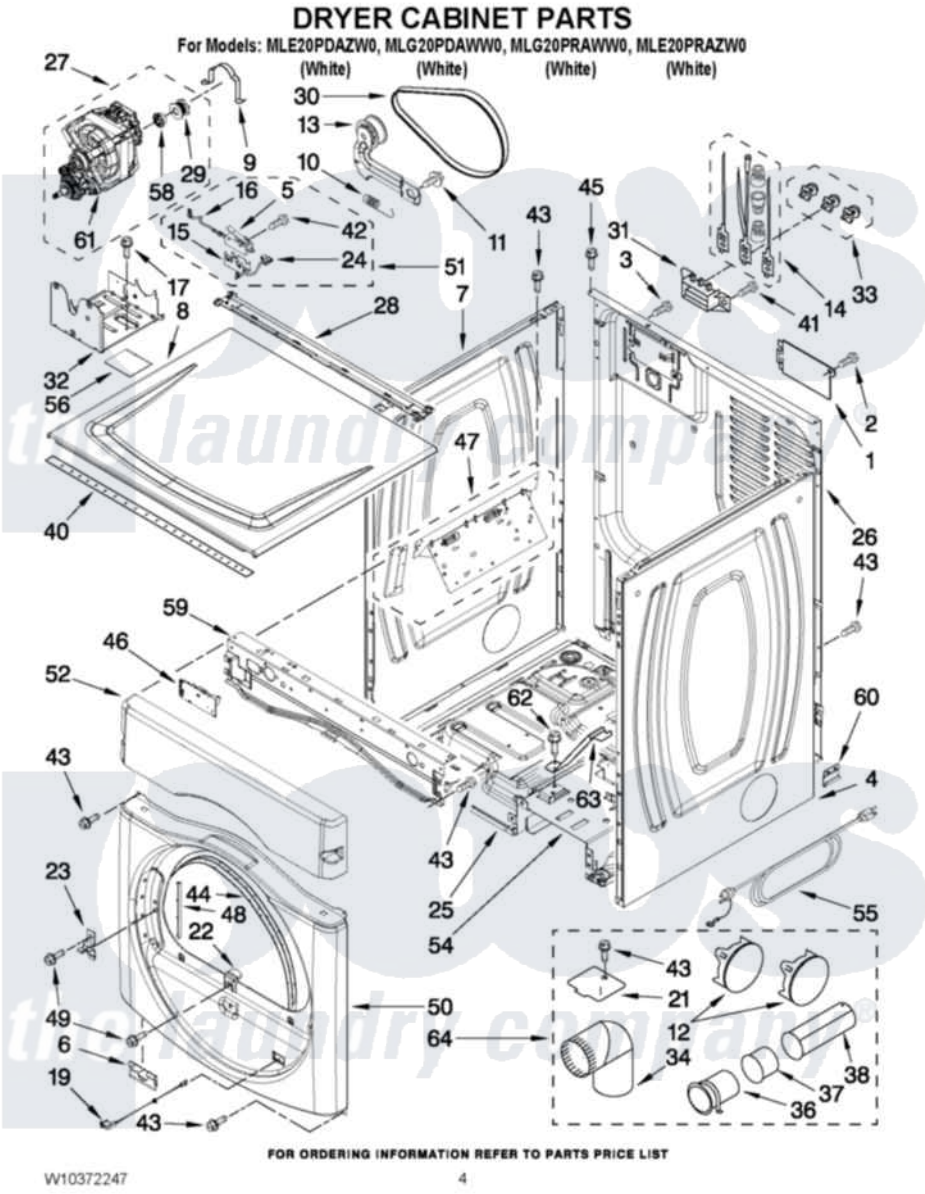

Maytag Residential Maytag MLE20PDAZW0 Washer/Dryer Parts Parts Diagram 02 - DRYER CABINET PARTS
Click on the part number to view part

Item	Original Part Number	Replaced By	Status	Part Description
1	W10286180	W10119283		Cover, Terminal Block
2	3390814	90767		Screw, 8A X 3/8 HeX Washer Head Tapping
3	8533974	4331106		Screw, No.10-32 X 7/16
4	8565048			Panel, Side
5	8564010			Assembly, Switch And Actuator
6	8519459			Clip, Toe Panel
7	8565054			Panel, Side
8	8563730	W10336080		Top
9	660658			Clamp, Motor Mounting 343481 685441
10	3387374			Spring, Idler
11	3389420			Retainer-Idler 1/4-20 X 1/16
12	697750	W10470674		Dryer Exhaust Kit
13	W10344192			Idler Assembly
14	279318			Terminal Tinned And Brass Panel

15	8564011		Bracket-Switch
16	W10167613		Wire, Belt Switch
17	343641	681414	Screw, 10AB X 1/2
19	W10128087	W10318609	Switch, Assembly Door
21	8066115	3394331	Plate Cover
22	8580015		Ramp, Door
23	8565122		Strike, Door
24	8539892		Wire-Motor To Belt Switch
25	8565046		(BROKEN BELT BASE, CABINET SWITCH)
"	W10198309		Base And Bracket, Vault Assembly
26	8565059		Panel, Rear
27	W10139766	W10396034	Motor Assembly 60 Hz
28	W10266747		Channel-Water, Dryer
29	3394341	W10299847	Pulley-Motor
30	W10131172		Belt, Drive
31	3397659		Block, Terminal
32	W10135695		Bracket, Motor
33	279393		Terminal Block Screw Kit
34	49026		4" - 90° Elbow
36	8563747		Exhaust Pipe Medium Pipe
37	8563750		Exhaust Pipe
38	8563749		Exhaust Pipe
40	8318396		Foam-Seal
41	8533971	90767	Screw, 8A X 3/8 HeX Washer Head Tapping
42	W10002600		Screw, 6-20 X 1 1/4
43	3390647	488729	Screw
44	3387242		Seal, Front Panel
45	3393008	308685	Side Trim)
46	W10376685		Control Board
47	8563727		Bracket, Control
48	8565043		Plug, Strip Front Panel
49	3357011	308685	Side Trim)
50	W10117421		Front Panel
51	W10155571		Switch, Assembly
52	W10198215		Enclosure, CCU Assembly
54	W10133261		Vault Switch, Bracket
55	3401401	3401402	Cord, Power
56	W10212660		Pad, Sound Dampening
58	3393657		Restrainer, Belt
59	8565237		Bracket, Console
60	W10198377		Bracket-Stack
61	3405160		Belt, Drive
62	693995		Screw, Hex Head
63	W10198376		Bracket, Burner
NI	279818	W10470674	Dryer Exhaust Kit