Maytag PYET344AZW 09 - WIRING INFORMATION

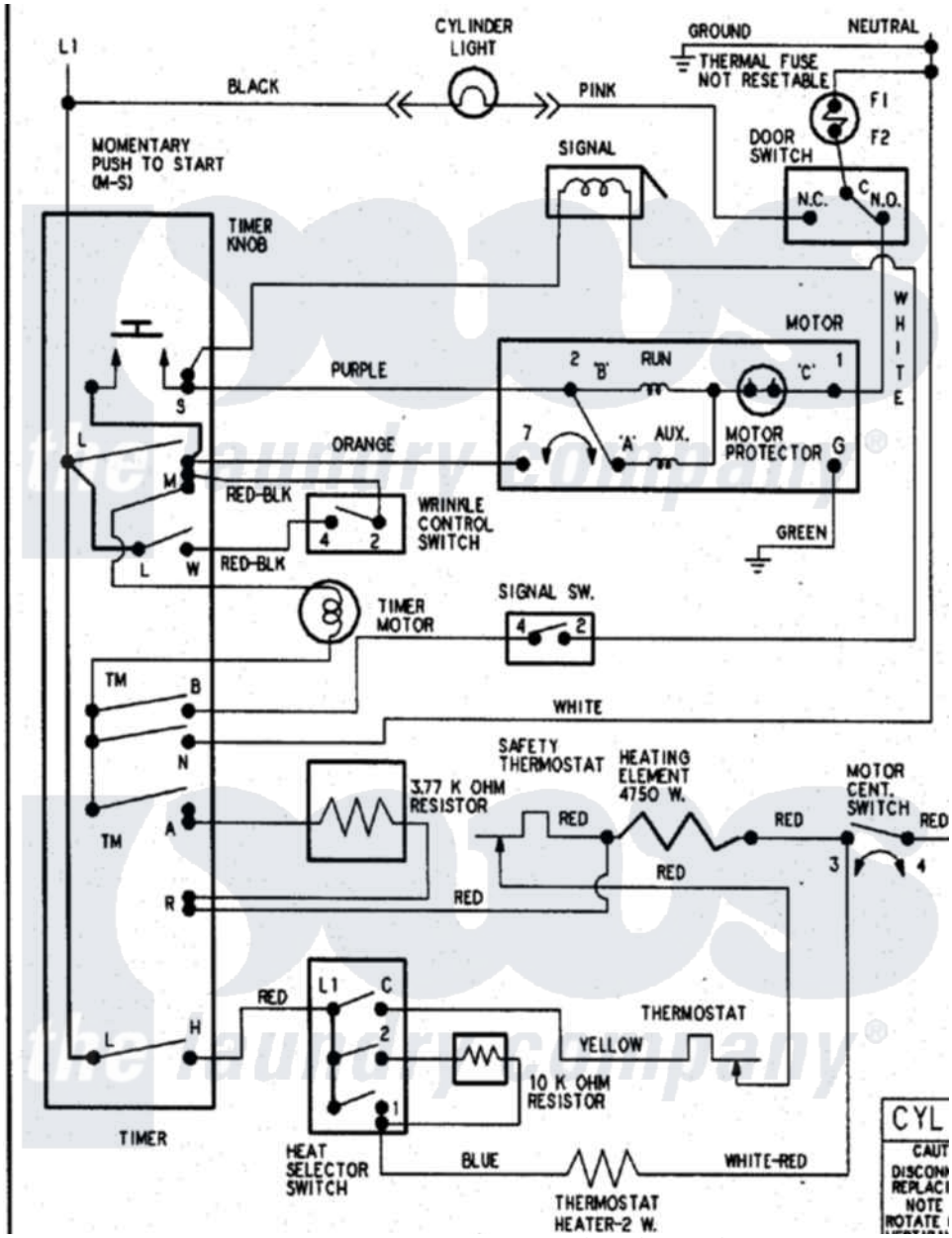

Maytag Residential Maytag PYET344AZW Dryer Parts Parts Diagram 09 - WIRING INFORMATION
Click on the part number to view part

Item	Original Part Number	Replaced By	Status	Part Description
NI	15003266		Not Available	WIRING INFORMATION