Maytag YMET3800TW0 06 - WASHER TOP AND LID PARTS

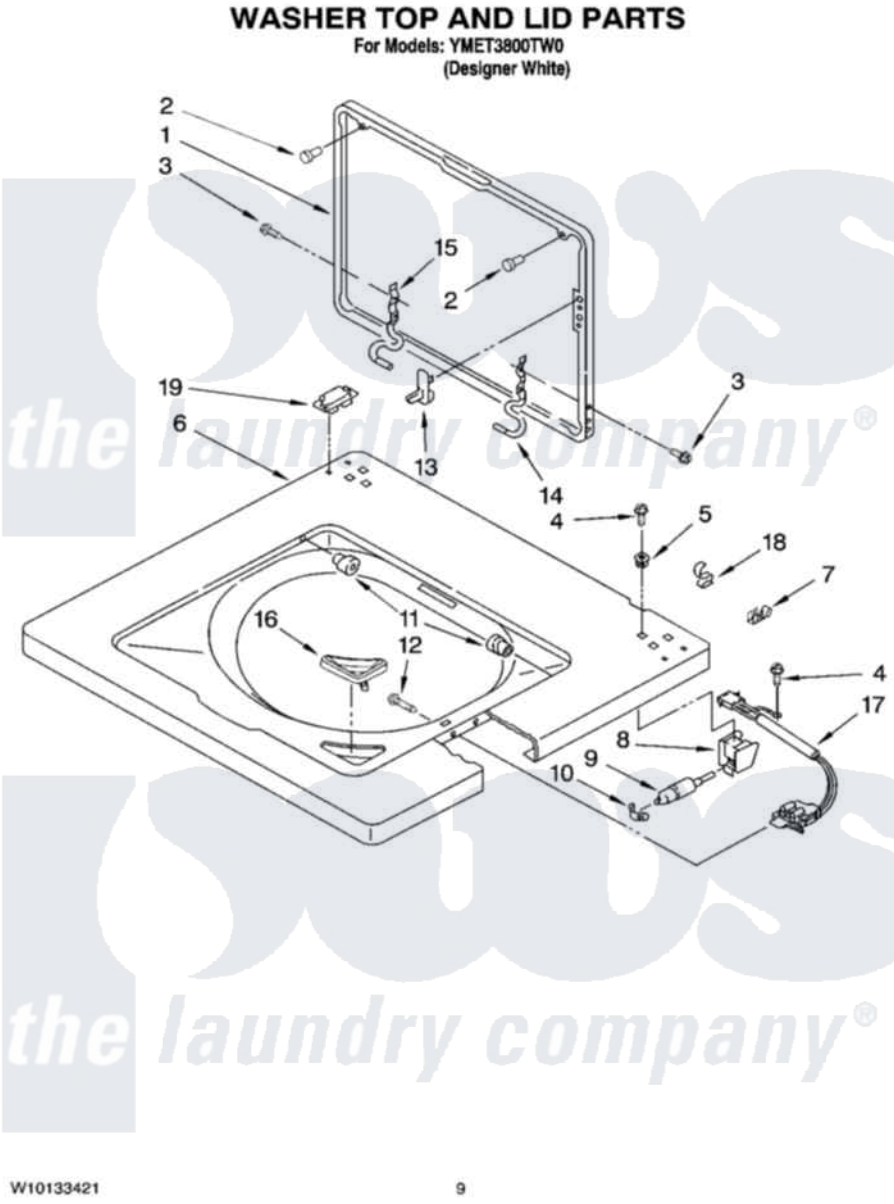

Maytag Residential Maytag YMET3800TW0 Washer/Dryer Parts Parts Diagram 06 - WASHER TOP AND LID PARTS
Click on the part number to view part

Item	Original Part Number	Replaced By	Status	Part Description
1	3351652	W10193874		Lid
2	9724509			Bumper, Lid
3	3351355	W10119828		Screw, Lid Hinge Mounting
4	343641	681414		Screw, 10AB X 1/2
5	692400			Nut, Push-In
6	3349817			Top, Console
7	357572	W10113937		Clip, Grounding
8	3354020			Bracket, Mounting
9	3350152			Retainer, Lid Assembly
10	3350828			Clip-Cylinder Retainer
11	21258			Bearing, Lid Hinge
12	3356311			Screw And Washer, Lid Switch Shield
13	358684			Strike, Lid Switch
14	3350101			Hinge, RH
15	3350102			Hinge, L.H.
16	3362952			Dispenser, Bleach

17	3355458	Switch, Lid
18	90016	Clip, Pressure Switch Hose
19	W10134768	Locator, Top